RAVEK

POLARIS RANGER

APEX LIGHTS

WHITE

INSTRUCTION MANUAL

RAVEK

POLARIS RANGER

APEX LIGHTS - WHITE

Part #: 64-104S

Fitment:

- POLARIS RANGER 570 2015+
- POLARIS RANGER 900 2014-2019
- POLARIS RANGER 1000 2017-2018

TOOLS NEEDED: **OPTIONAL*

Side Cutter Pliers

Ratchet

10mm Deep Well Socket

3mm Allen Wrench

4mm Allen Wrench

Needle Nose Pliers

Lighter / Heat Gun

*11/32" Drill Bit**

*1/4" Drill Bit**

*Drill**

PARTS INCLUDED:

- Apex Light (2x)
- Power Harness (2x)
- Extension Harness (2x)
- Roll Bar Adapter (2x)
- Strap (2x)
- Zip Tie (8x)
- Double Sided Tape (2x)
- Heat Shrink Tubing (1x)
- M6 Flat Washer (2x)
- M5 x 0.8 x 6mm Allen Screw (4x)
- M6 x 1.0 x 10mm Allen Screw (2x)
- Adhesive Promoter Wipe (2x)
- Rubbing Alcohol Wipe (2x)
- Dielectric Grease (1x)

INSTALL VIDEO TUTORIAL

DON'T LIKE INSTRUCTIONS?

VISIT OUR WEBSITE TO ACCESS THE VIDEO TUTORIAL.

NOTE: Dielectric grease is provided in each kit. We've engineered sealed connectors, but we still recommend applying a small dab of dielectric grease on each connection point for added protection.

NOTE: Make sure your vehicle is off and key is out of the ignition before starting.

1 REMOVE CENTER HOOD PANEL

Remove the center hood panel on your Ranger by turning the latches a quarter turn each and lift the hood away from the SxS. [SEE FIGURE 1A]

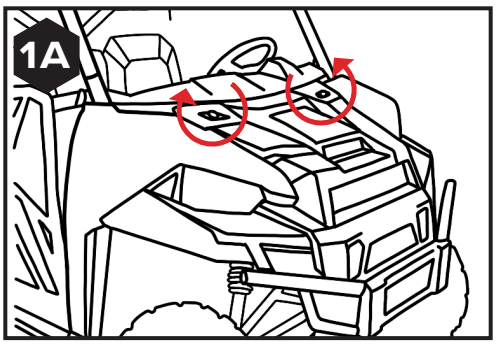

2 LOCATE THE BUS BAR

Locate the Bus Bar underneath the panel removed in step 1. Remove the far-right and far-left nuts on the Bus Bar using a 10MM DEEP WELL SOCKET and RATCHET. [SEE FIGURES 2A – 2B]

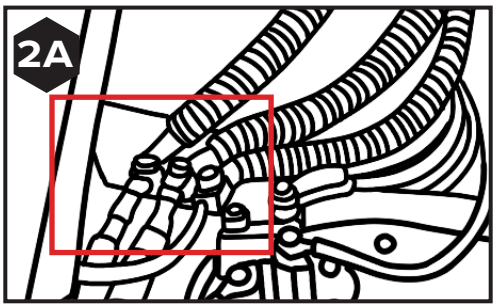

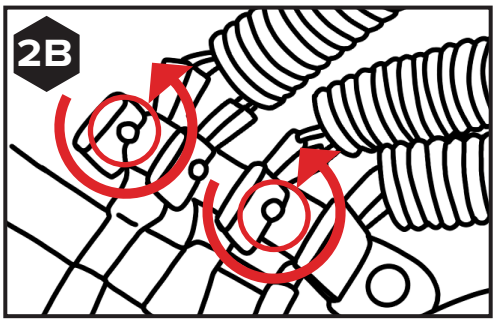

3 HOOK UP WIRING

Once the nuts are removed, hook up both Power Harnesses supplied to the negative (black wire) ring terminal to the middle terminal, and the positive (red wire) to the far-left terminal on the bus bar. [SEE FIGURES 3A & 3B]

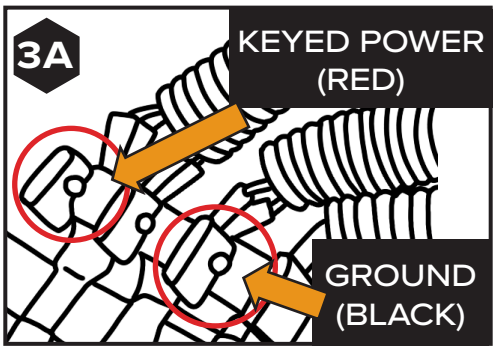

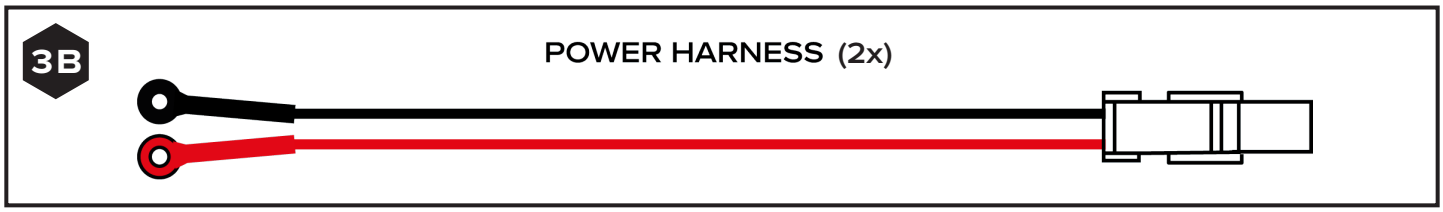

4 SELECT LOCATIONS FOR APEX LIGHTS

Your options include:

- **Exterior Body Panels**
  Any exterior panel with 8" of flat surface for mounting
- **Roof Mounting**
- **Roll Bar/Bumper Mounting**

Check out the video to the right (see QR code) for a 50 second walkthrough of all the different mounting options for your Apex Lights.

5 HEAT SHRINK YOUR CONNECTIONS AND EXTRA CONNECTORS

As you make plug & play connections, use the heat shrink tubing, provided to protect your connections from dirt on the trails.

Go over the connection points you make and cut 2" of heat shrink for each. Use a lighter or heat gun to shrink the tubing. [SEE FIGURES 5A – 5G]

HEAT SHRINK CONNECTIONS

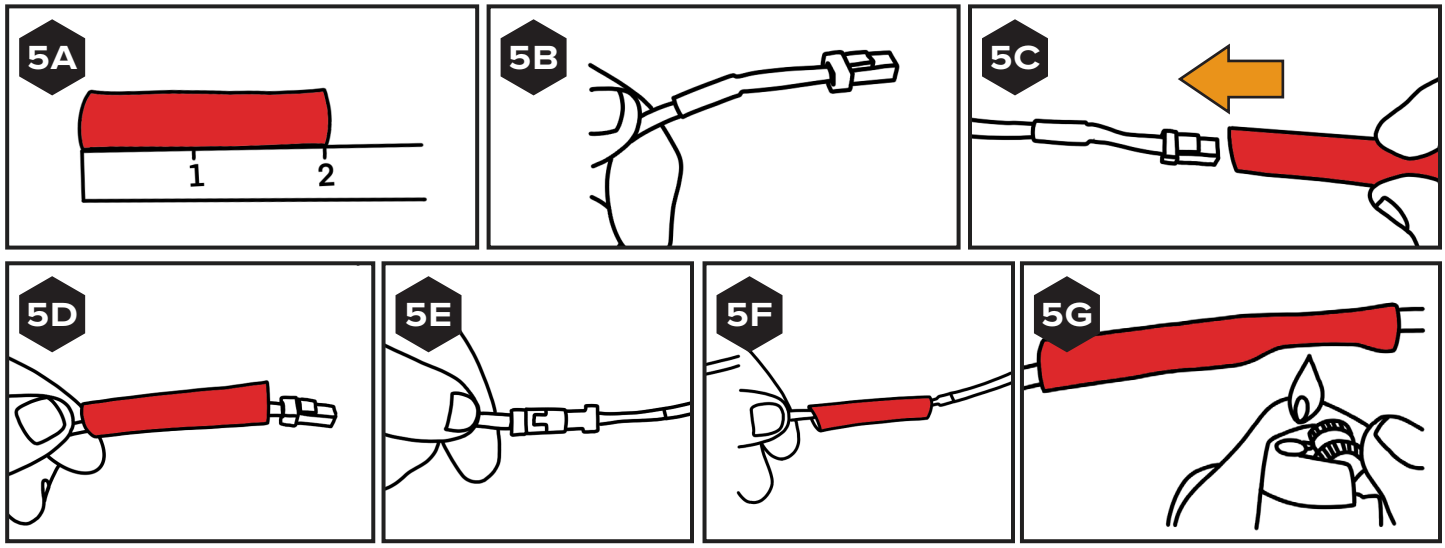

For the unused extension harness connectors (mentioned in the next step) cut 1.5” piece of heat shrink tubing, slide it over the connector and heat shrink it using a lighter or heat gun. Use needle nose pliers to pinch the end of the extra heat shrink. This will act as a cap to protect the connectors from getting dirt inside. [SEE FIGURES 5H – 5L]

HEAT SHRINK EXTRA PLUGS

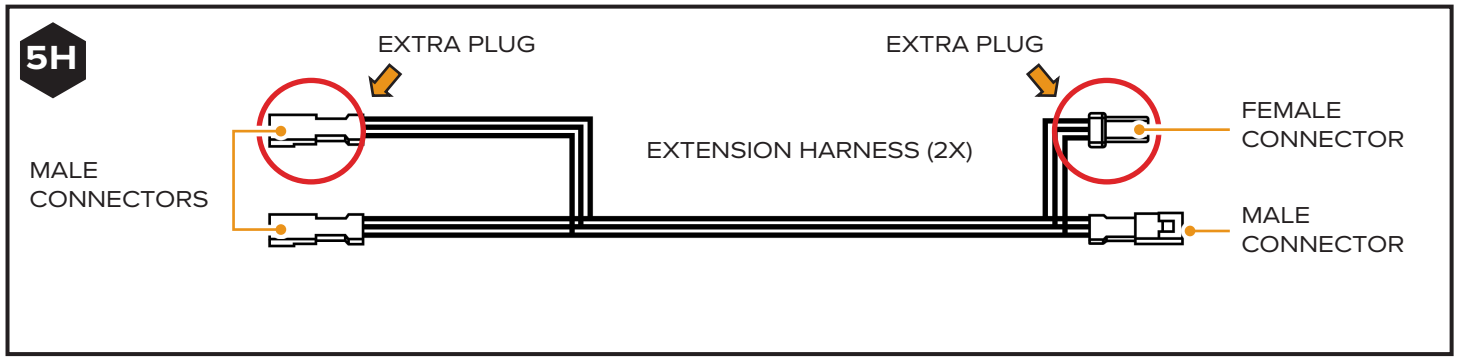

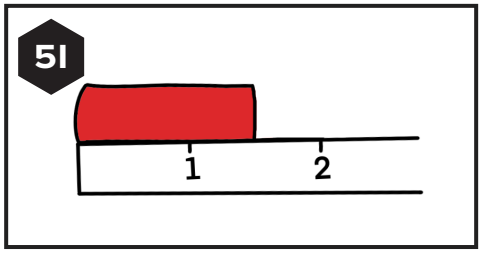

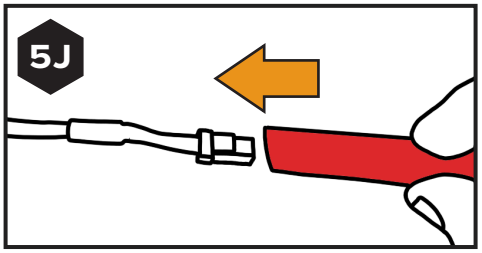

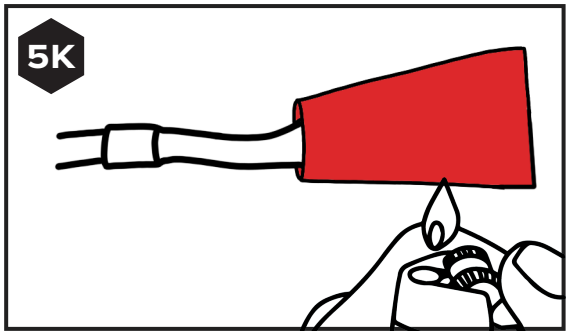

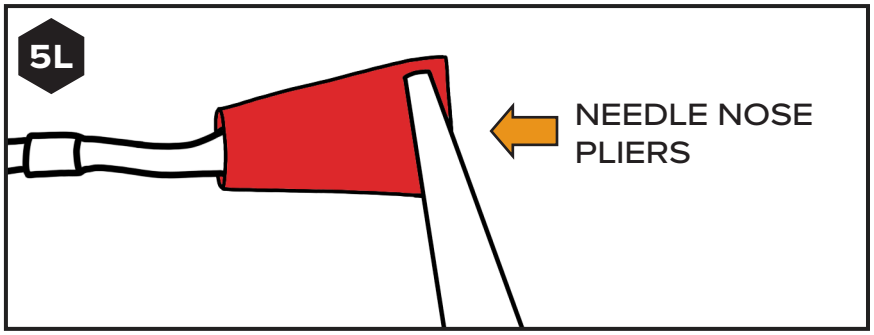

6 ROUTE WIRING

Find the two extension harnesses included in the kit. Take one of the extension harnesses and route the end with two male connectors to where you’ll install the Apex Lights.

Once you’ve routed your extension harness, connect it to the power harness. [SEE FIGURES 6A – 6E]

NOTE: We suggest you leave slack in wires until end of install when wires can be secured with zip ties provided. Route all wiring away from moving or hot components.

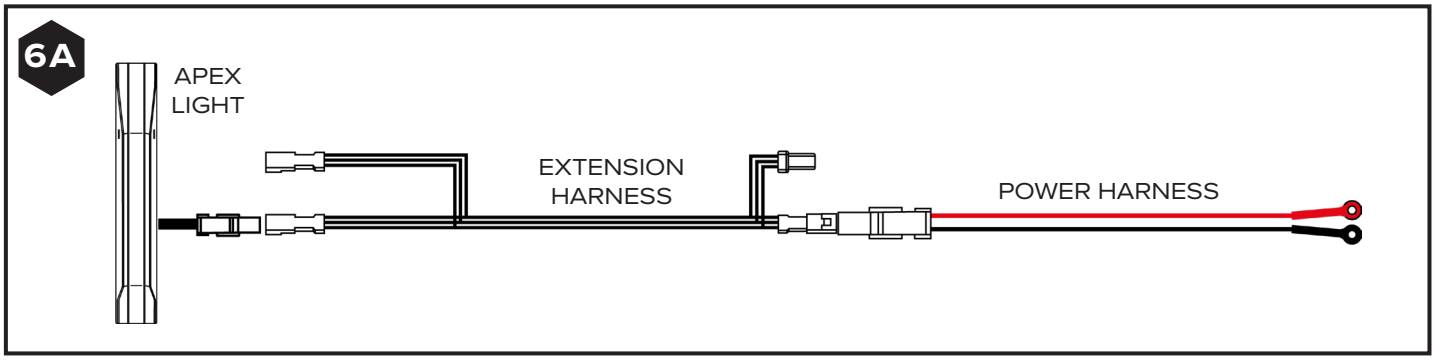

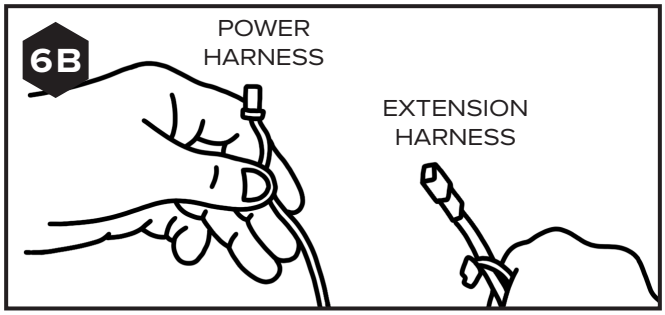

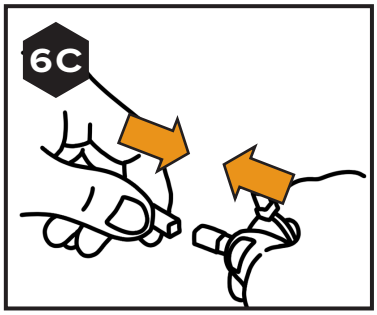

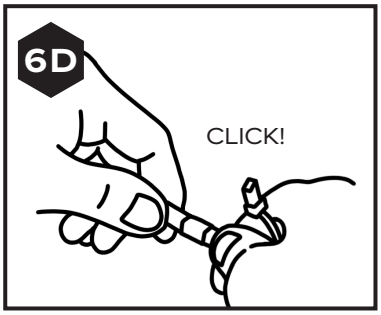

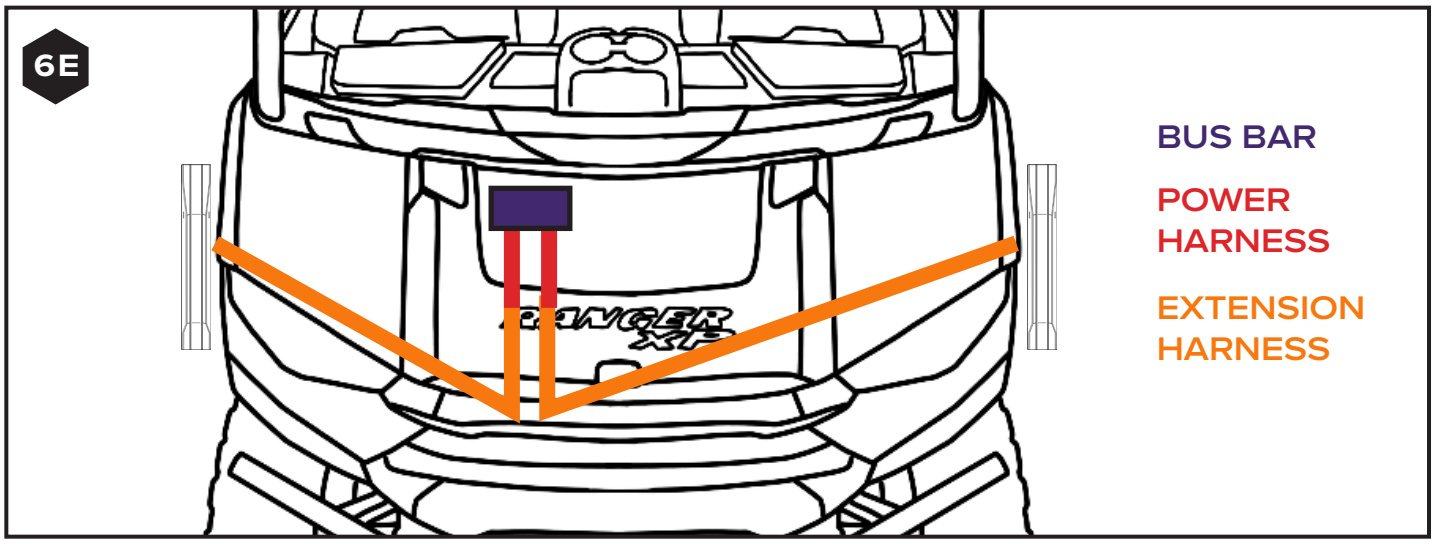

7 READY TO MOUNT APEX LIGHT

Once you have routed your extension harness, you are now ready to mount your Apex Lights.

If you have chosen to mount your Apex Lights to a roll bar or bumper, you will follow the Roll Bar mounting steps detailed in step 7A.

If you have decided to mount your Apex lights to either an exterior panel or to your roof, you now have to decide whether you want to mount your Apex lights via:

a) **Adhesive mount (i.e. no drill) → jump to step 7B**

b) **Drill-mount for increased security → jump to step 7C**

7A OPTION A - ROLL BAR MOUNTING:

OPTION A DIAGRAM - ROLL BAR MOUNTING

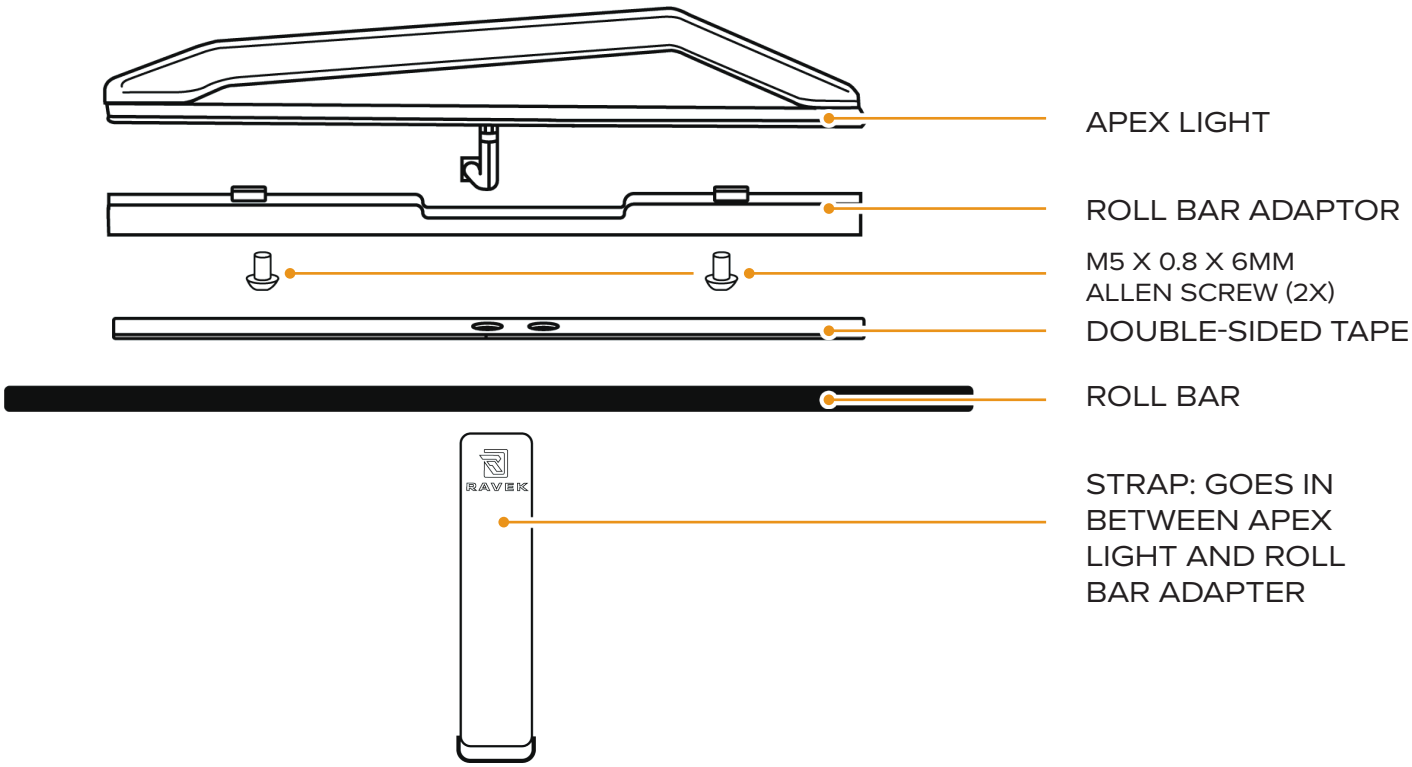

INSTALL ROLL BAR ADAPTOR

Install the roll bar adapter to the base of the light by using two of the M5 x 0.8 x 6mm Allen Screws with a 3MM ALLEN WRENCH. [SEE FIGURES A – C]

NOTE: Choose which side you would like your wire to exit the light that allows you to best hide your wires.

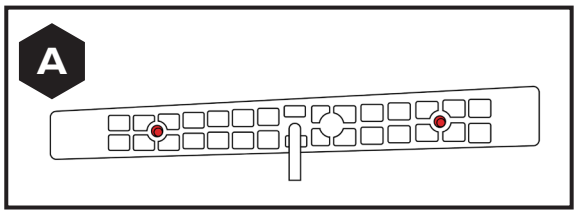

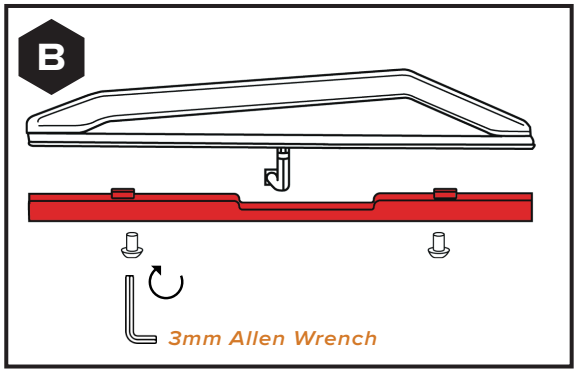

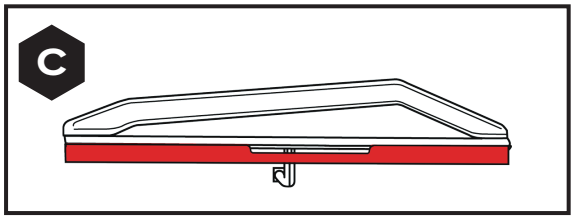

ii INSTALL STRAP

Once the roll bar adapter is securely attached to the light, install the strap provided through the opening between the light base and the roll bar adapter. [SEE FIGURES D & E]

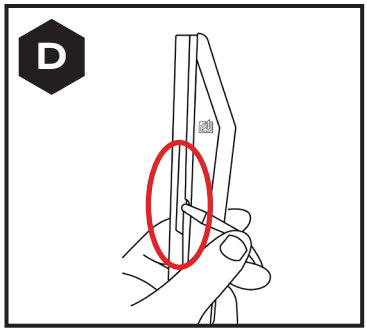

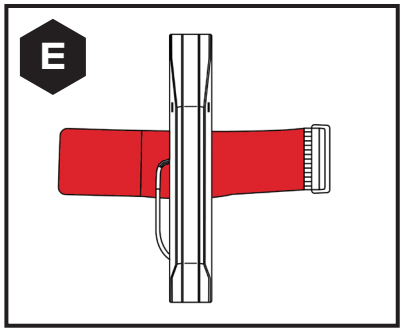

iii WIPE WITH RUBBING ALCOHOL

Before you permanently install your Apex light to the UTV's roll bar you've chosen, wipe down the roll bar and the base of the light with the rubbing alcohol wipe provided and let dry.

Next wipe down the roll bar and light base with the adhesion promoter wipe provided. Let dry. [SEE FIGURES F – J]

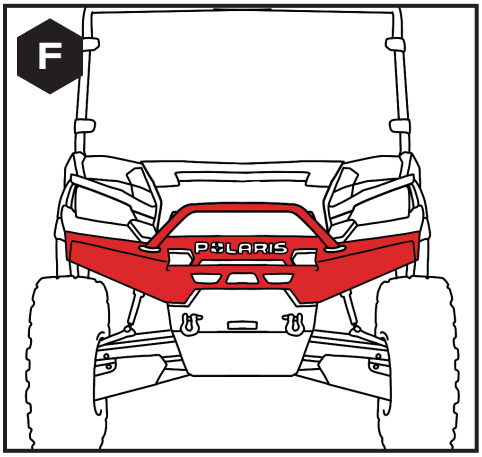

RUBBING ALCOHOL WIPE

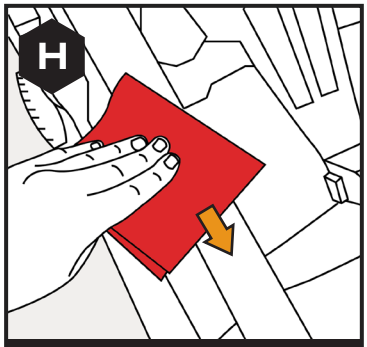

ADHESIVE PROMOTER WIPE

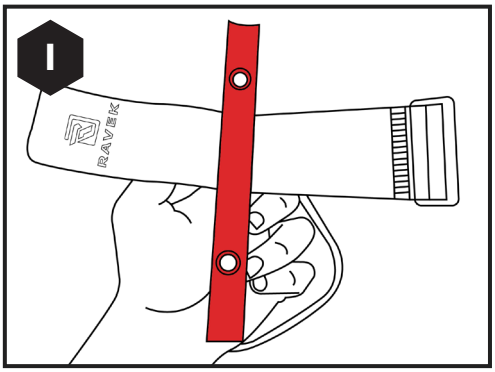

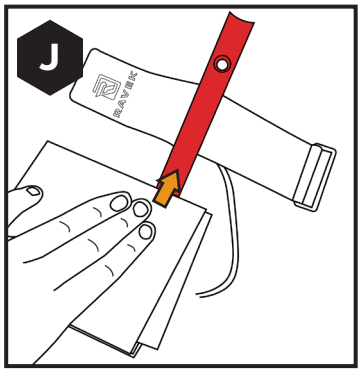

iv APPLY TAPE

Apply the double-sided tape to the dry Apex light's roll bar adapter, and attach the light to the surface you cleaned and prepared in the prior step. [SEE FIGURES K – N]

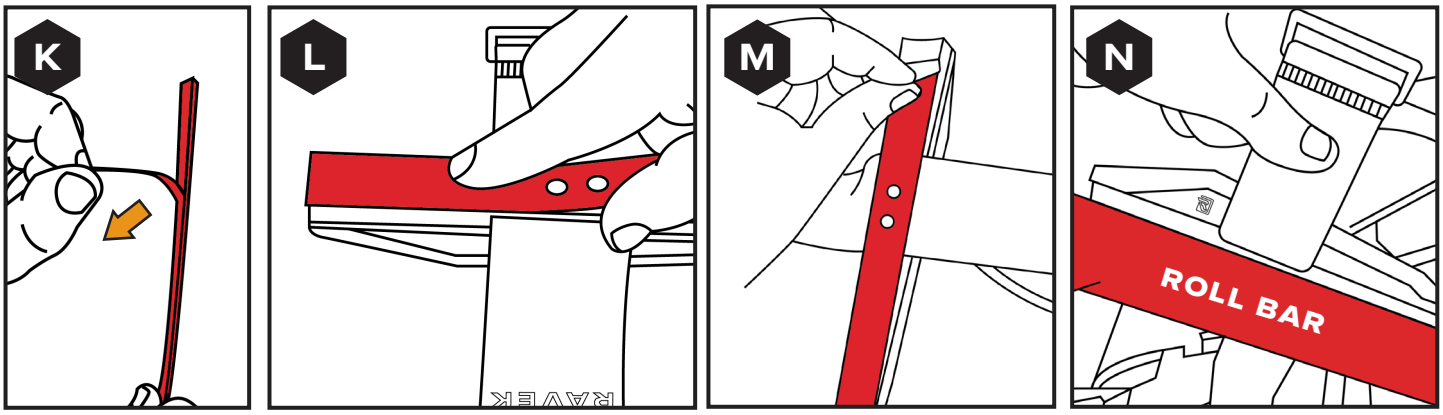

v TIGHTEN STRAP

Tighten straps onto base and roll bar. [SEE FIGURES O & P]

NOTE: If you have excess length of strap you can rotate the buckle away from the slack to reduce the slack in the strap.

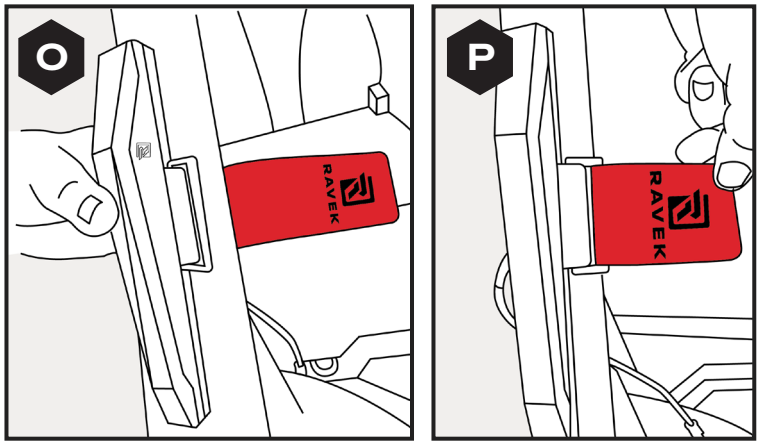

JUMP TO STEPS 8-11 TO FINISH INSTALL

7B OPTION B - ADHESIVE ONLY MOUNTING:

OPTION B DIAGRAM - ADHESIVE ONLY MOUNTING

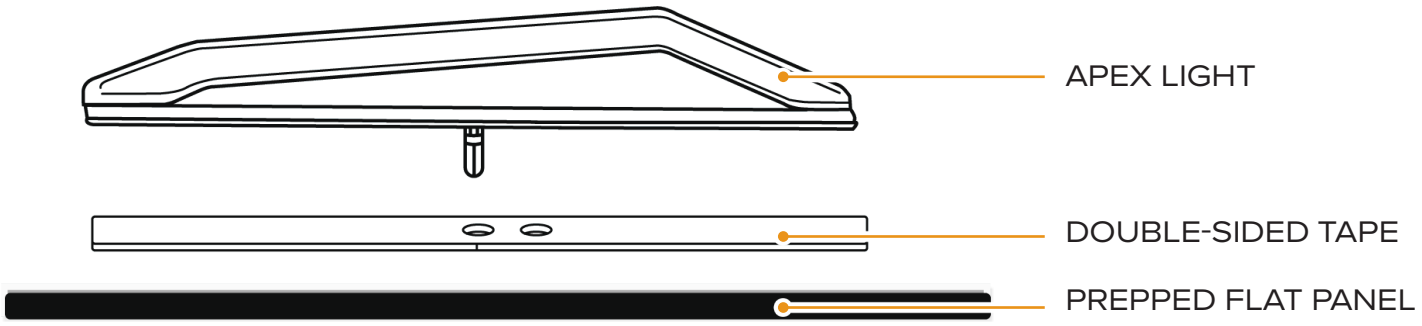

i LOCATE A SURFACE TO MOUNT TO

Locate an exterior panel with 8” of flat surface for mounting. [SEE FIGURE A]

NOTE: If you’re adhesive mounting the Apex Lights to the roof, we recommend drilling a hole to feed the wires through. The Apex Light adhesive creates a water-tight seal.

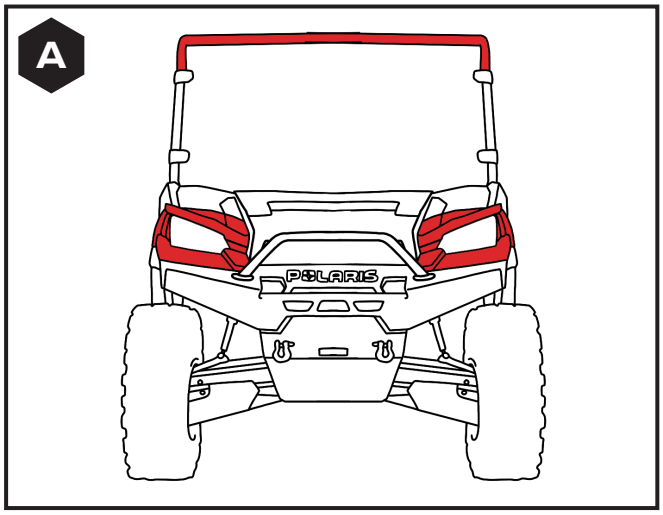

ii WIPE DOWN SURFACES

Before you permanently install your Apex light to the UTV’s flat panel you’ve chosen, wipe down the panel and the base of the light with the rubbing alcohol wipe provided and let dry.

Next wipe down the panel and light base with the adhesion promoter wipe provided. Let dry. [SEE FIGURES B & C]

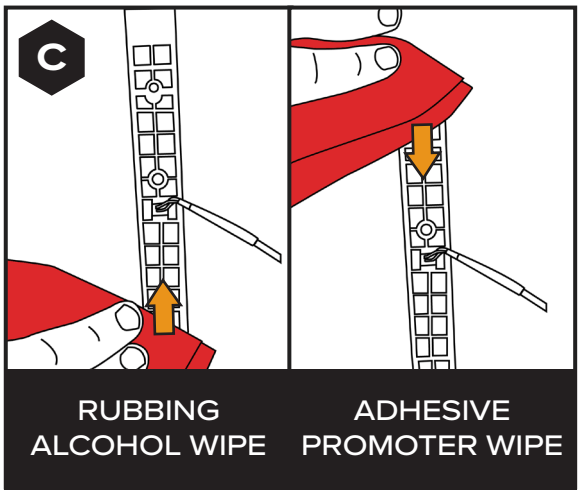

iii APPLY TAPE

Apply the double-sided tape to the Apex light’s base and affix the light to the prepped surface. [SEE FIGURES D - G]

NOTE: Be sure the whole light’s base is in contact with the surface of the UTV to ensure the light will hold up permanently.

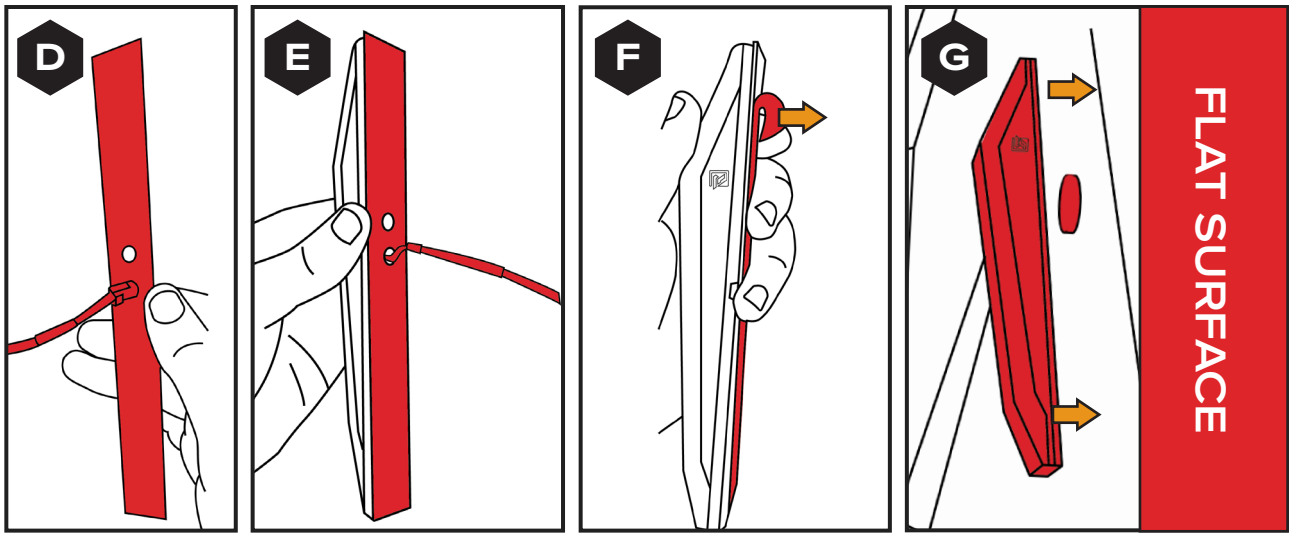

JUMP TO STEPS 8-11 TO FINISH INSTALL

7C OPTION C - DRILLED AND ADHESIVE MOUNTING:

OPTION C DIAGRAM - DRILLED AND ADHESIVE MOUNTING

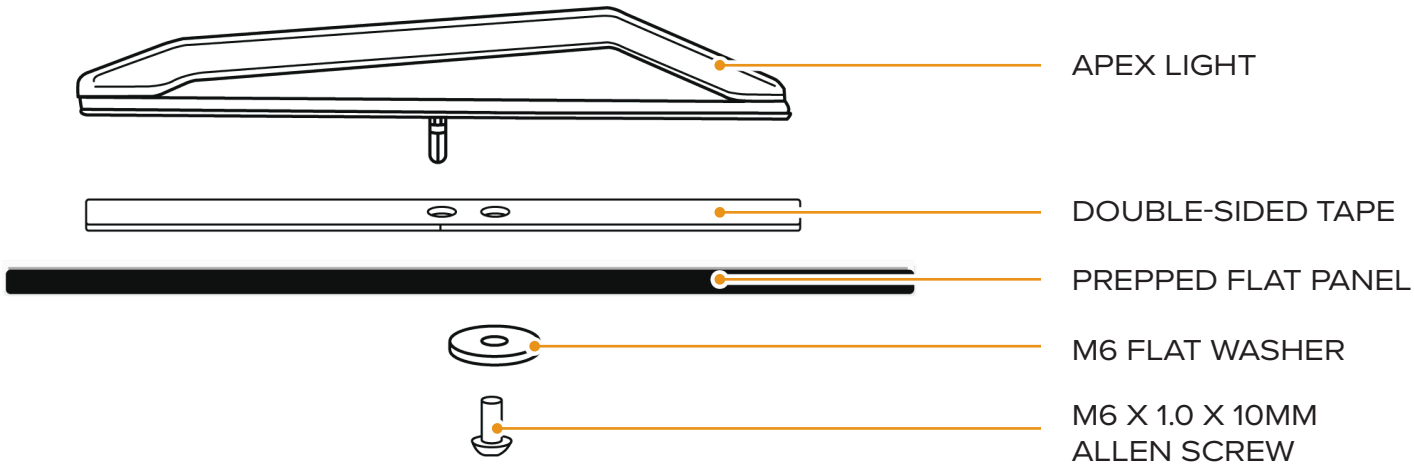

LOCATE A SURFACE TO MOUNT TO

Locate an exterior panel with 8” of flat surface for mounting. [SEE FIGURE A]

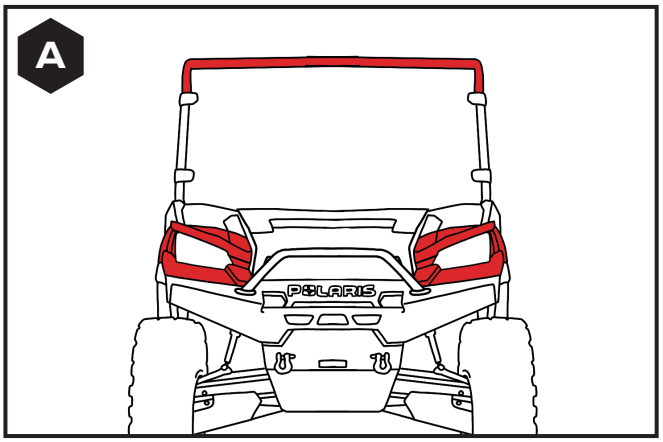

ii MARK HOLES TO DRILL

Use the double-sided tape holes as a template for the drilling locations. Confirm you can access the inside of the panel that you'll need to be able to access this area with your flat washer. [SEE FIGURES B - D]

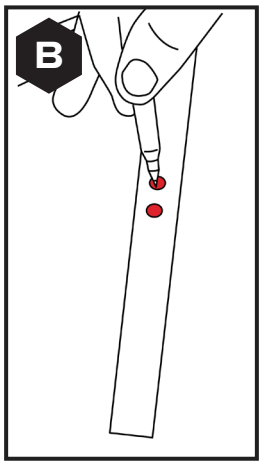

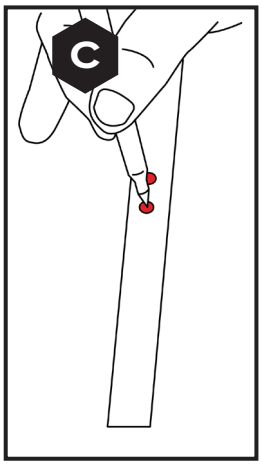

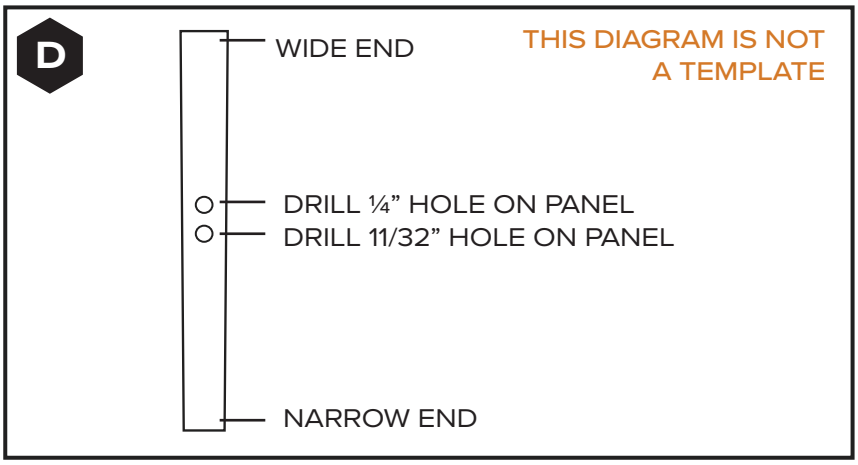

iii DRILL ¼" HOLE

Once you have your holes marked, drill a ¼" hole that will be used to feed the screw through.

NOTE: We recommend using a brad point drill bit to avoid damaging your panel.

iv DRILL 11/32" HOLE

Drill a 11/32" hole that you will feed the Apex light's wire connector through.

v WIPE SURFACE WITH RUBBING ALCOHOL

Before you permanently affix your Apex light to the UTV's flat surface you've chosen, wipe down the flat surface and the base of the light with the rubbing alcohol wipe provided and let dry.

Next wipe down the flat surface and light base with the adhesion promoter wipe provided. Let dry. [SEE FIGURES E & F]

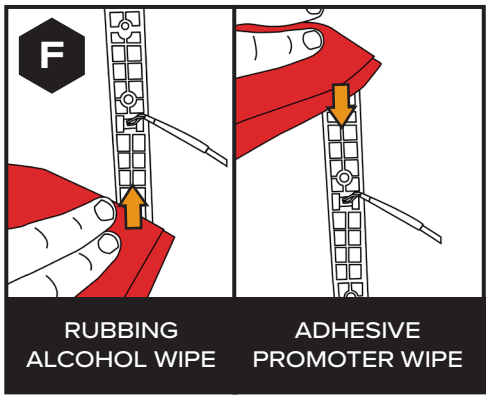

vi APPLY TAPE

Apply the double-sided tape to the Apex light's base. [SEE FIGURES G - I]

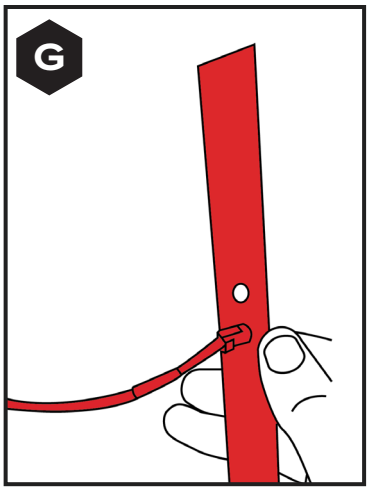

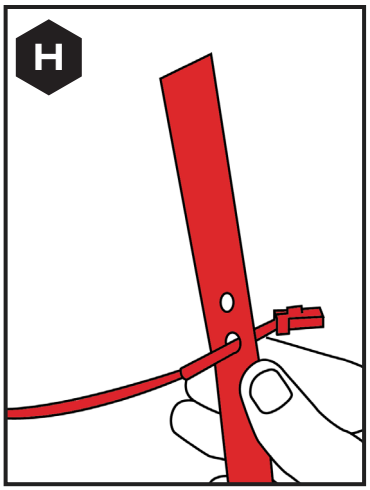

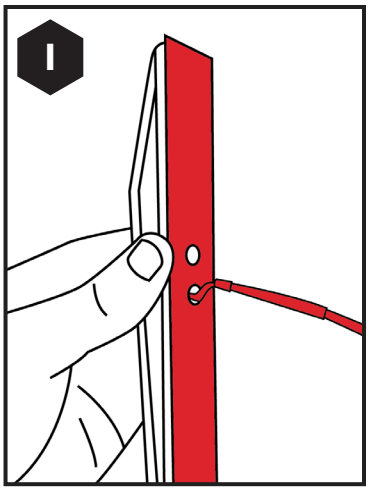

vii ADHERE LIGHT TO PREPPED SURFACE

Feed your light's wiring through the 11/32" hole. Peel away the double-sided tape cover, and stick the Apex light to the prepped surface. [SEE FIGURES J - L]

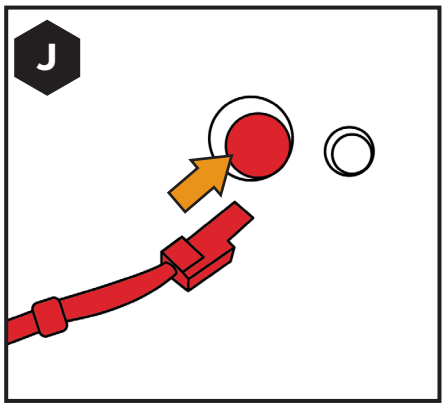

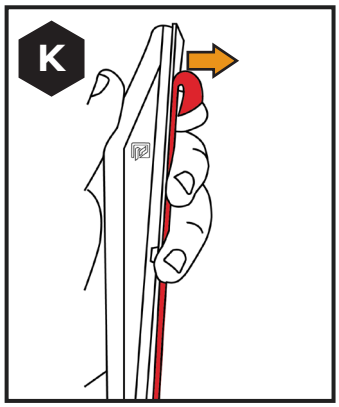

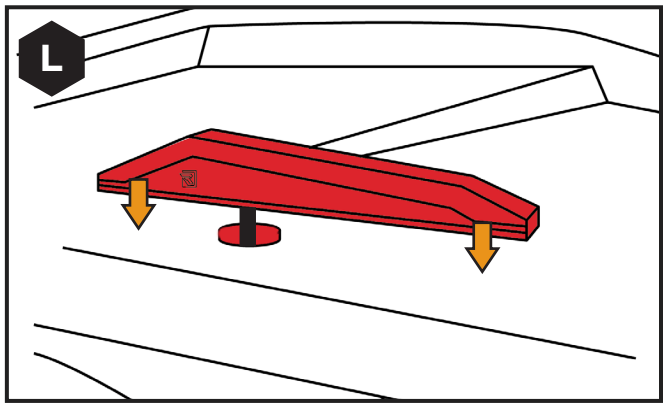

viii

THREAD IN SCREW

Thread your M6 x 1.0 x 10mm Socket Allen Screw with an M6 Flat Washer through the backside of the panel into the light's base using a 4MM ALLEN WRENCH. [SEE FIGURES M & N]

NOTE: If a longer screw is required, you have two options:

1. Give us a call or email, and we will express mail you a screw of the length you need.

2. Go to your local hardware store and purchase a M6 x 1.0 x (your desired length).

M

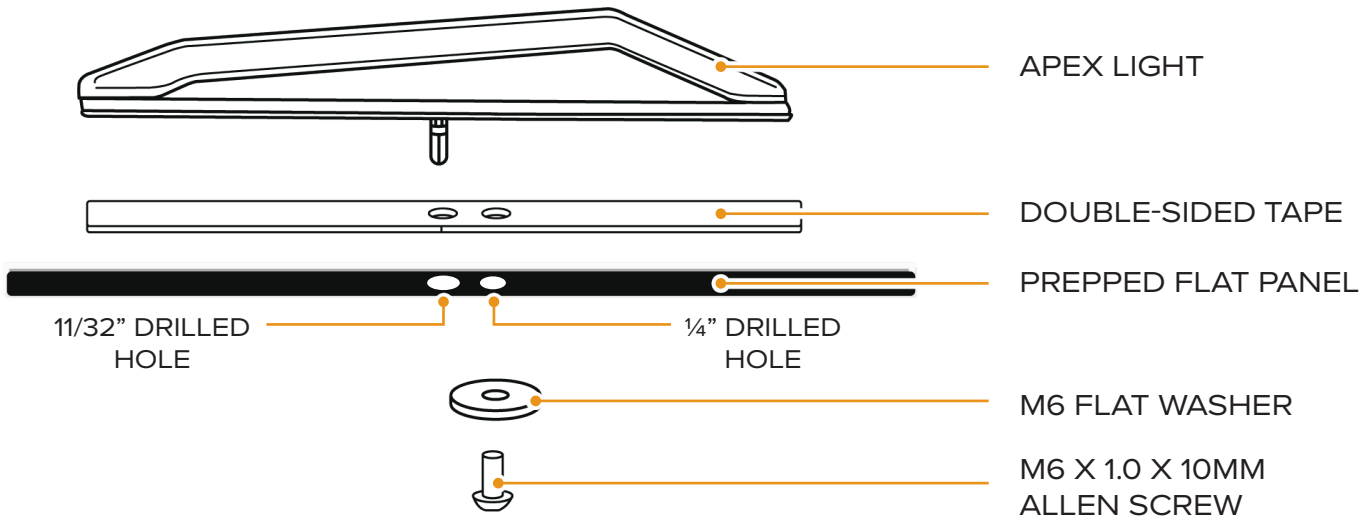

N

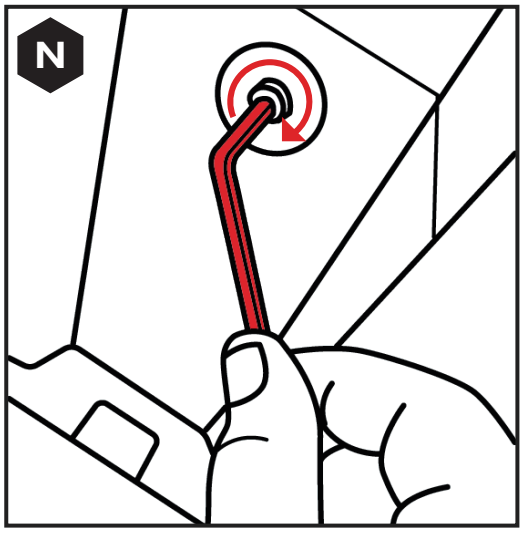

JUMP TO STEPS 8-11 TO FINISH INSTALL

8 PLUG IN THE APEX LIGHT

Plug your Apex light into the extension harness. [SEE FIGURES 8A & 8B]

NOTE: Remember to heat shrink all your connection points as shown in step 5.

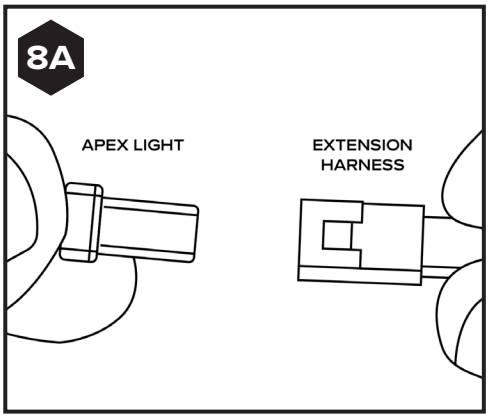

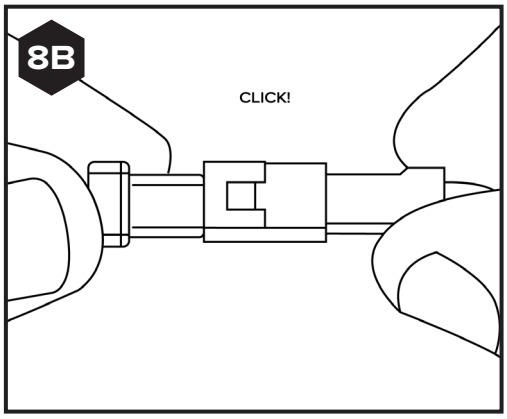

9 REPEAT STEPS 1 TO 8

Repeat step 1 through 8 on the right side of the Ranger to install your other Apex light.

10 LET THE ADHESIVE CURE

Let adhesive tape cure for 24 hours before riding.

11 SECURE WIRING

Once you have both of your Apex lights mounted, go through and secure all the wiring using the zip ties provided.

NOTE: Secure wiring away from hot or moving components.

NOTE: Remember to heat shrink all your connection points as shown in step 5.

RAVEK

BUILT FOR MORE

WHY RAVEK

Stock UTVs don't come with enough storage, lighting, comfort, and protection. That's why we started RAVEK.

We live to design, manufacture, and test innovative SxS upgrades that elevate the riding experience. Here's what you can expect from us:

- Durable products built to last (100% lifetime guarantee)
- UTV upgrades thoughtfully designed & tested by riders
- Outstanding installation support (videos & USA customer service)
- Constant flow of epic riding content (check out our social media)

We're confident your RAVEK product will earn its place on your machine. Please call or e-mail us if we can help.

- Harry & Ricky (Brothers & Owners)

MESSAGE FROM THE DESIGNER
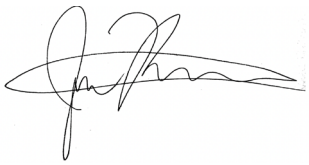
I'm not here to just make a light but to really express what they do for the vehicle and maximize their function and aesthetics. The white Apex Lights are the classic configuration, but we made sure they pop next to the vehicles current DRLs.