DURACLUTCH INSTALLATION
15-579 K-DCR RZR 570-CEBS R-SERIES

SVI, LLC 18MAR2024

KIT PART #: 15-579
MODEL: DCR-RZR-CEBS 570
DESCRIPTION:

MY16 RZR 570 MODELS. Includes only this model with the following transmission part number.

- MY16: 1333660

EXCLUDES MY 16 RZR 570 models with the following transmission numbers: 1333507, 1333508, 1333509 see DCR kit 15-564 for these numbers.

NOTE: To locate transmission part number look at transmission housing behind rear wheel and it will say either Model # or Part # on decal. See pic below.

KIT CONTENTS:

1. 10-237 ASM-DC PRIMARY EBS R-SERIES
2. 10-259 ASM-DC SECONDARY 9.5
3. 35-063 BELT
4. 99-023 LOCTITE 243 0.5ML CAPSULE 1330255
5. 90-062 QTY 2 SHIM WASHER 0.880x0.977x0.036
6. 90-063 QTY 1 SHIM WASHER 0.880x0.977x0.060
7. 30-091 TOOL-BELT INSTALL
8. 97-066 DECALS - CLUTCH HOUSING AND DASH 35-063
9. 98-066 DURACLUTCH WARRANTY
10. 98-126 INSTALLATION INSTRUCTIONS DC 15-579 (THESE INSTRUCTIONS)

To watch an R-Series installation video on the RZR 900 go to www.duraclutch.com or checkout our YouTube channel https://www.youtube.com/user/SpecialtyVehiclesInt

DURACLUTCH INSTALLATION

1. Remove clutch cover. Note: on some models it may ease cover removal by removing grease zerk on control arm.

2. Remove stock secondary clutch. Install qty (1) 90-063- 0.060 shim washer and qty (1) 90-062- 0.036 shim washer on the spline shoulder. =.096 of total spacing. Install the DCR Secondary.

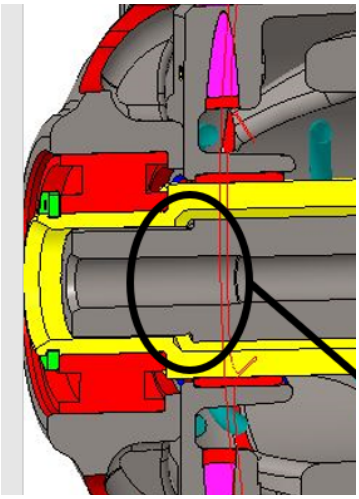

3. Install the stock secondary hardware as shown below. Use the washer that was under the screw head. Place Blue Loctite provided on the secondary screw threads. Tighten screw to 45 ft-lbs.

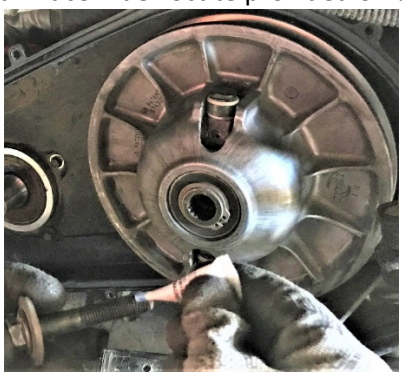

4. Remove Primary clutch bolt. Remove the stock Primary clutch with puller SVI # 99-030. Greasing the end of the puller slightly will aid in removal. Do not get grease on any clutch components.

5. Clean the engine tapered shaft and Primary clutch bore with alcohol or degreaser. Do not lubricate.

6. Slip the belt into the Secondary so you can read the part number on the belt and using Belt Install Tool, open secondary so belt will seat down into clutch. Sometimes using a screwdriver to support the tool will help seat the belt lower into clutch.

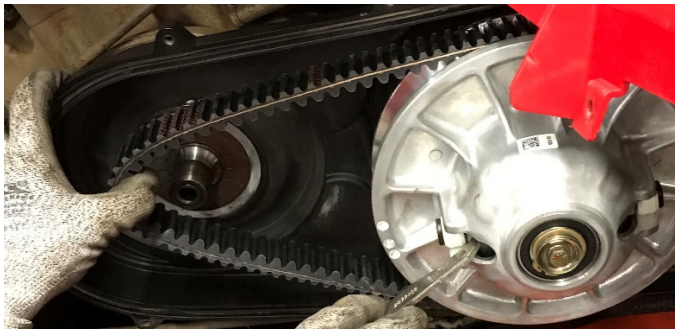

7. Slide belt into DURACLUTCH DCR Primary clutch then install on post. Use stock primary hardware removed in step 4. Tighten bolt to 47 ft-lbs.

8. Set belt tension. Place transmission in Park and make sure machine is turned off. Rotate secondary by hand to seat belt in secondary clutch until belt tension is tight.

9. Once belt tension is set, start machine and verify that the secondary clutch has slight to no rotation at idle. (If slight rotation this will go away after belt break-in) If slight to no rotation, proceed to step 11. If the secondary is spinning fast, proceed to step 10.
10. If the secondary rotates fast, turn machine off and check to see where the belt is riding in between the primary sheaves. Ideal belt location should be centered with a small gap on each side between the sheaves. Follow steps a. <u>or</u> b. to determine next action.
    a. If belt is up against fixed sheave (inward), remove belt and secondary screw & secondary and add one 90-062- 0.036 shim washer included in kit onto shaft. Install secondary, secondary screw and belt, start machine to reset alignment. If the secondary still rotates fast and rides against fixed sheave, add another shim washer. Adjust until there is slight to no rotation, remember to blue Loctite secondary screw when alignment is complete and torque to spec, proceed to step 11.
    b. If belt is up against moveable sheave (outward), remove belt, secondary screw & secondary and remove one 90-062- 0.036 shim washer. Install secondary, secondary screw and belt, start machine to reset alignment. If the secondary still rotates fast and rides against moveable sheave, remove another shim washer. Adjust until there is slight to no rotation, remember to blue Loctite secondary screw when alignment is complete and torque to spec, proceed to step 11.

11. Install outer clutch housing.
    NOTE: The clutch cover screws are easy to cross thread or strip inner plastic cover.

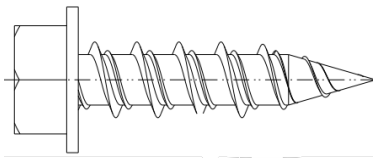

    NOTE: The clutch cover screws are easy to cross thread or strip. They screw into a plastic back cover. Torque spec: 50 in-lbs. This is like a screwdriver torque. Use a hand wrench or a clutch screw gun at a very low setting.

    Ensure seal is good or replace with Duraclutch seal part # 35-045. To ensure the primary does not rub against the cover push up and back on the housing while <u>lightly</u> snugging the bottom screws. Then tighten the top rear screw followed by the other top screws. Tighten all remaining screws including the bottom screws evenly. After starting the engine if you hear the primary rubbing, push on the cover while the engine is running in different directions to see which way will eliminate the rubbing. Stop the engine and loosen the housing screws and retighten using the above sequence while pushing on the cover in the direction that eliminated the rubbing. If this does not eliminate the rubbing, try installing a new 35-045 gasket and go through the bolt tightening sequence again. If you cannot eliminate the rubbing the cover is heat warped and you may have to install a new cover and perhaps a new back plate. You may also try using a heat gun to remove heat sag in the cover.

12. Install grease zerk in step 1, if removed.

13. Drive vehicle for 5 miles to break-in DURACLUTCH kit components.

NOTE: If the transmission shifts hard after break-in there are likely issues other than drag in the clutches. See your dealer or call DURACLUTCH service (218-967-8205).

DECALS

14. Apply two decals as shown – one on the clutch housing and one on the dash. Clean surface with alcohol or similar non-harsh solvent. Decal application is important to alert service technicians that the standard Polaris clutches have been replaced.