KFI UTV PLOW TUBE PRO 2.0

Instruction Manual

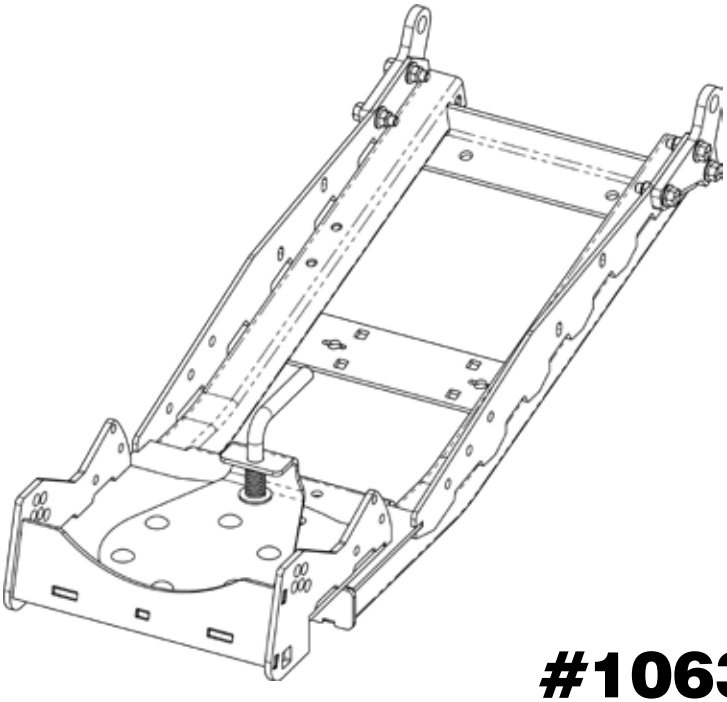

#106300
UTV PRO 2.0
Plow Tube System

TWO YEAR LIMITED WARRANTY 2 KFI

Rev-B 06/11/2026

Manual Conventions

This manual uses the following symbols to help differentiate between different kinds of information. The safety symbol is used with a key word to alert you to potential hazards associated with operating and maintaining a plow.

Follow all safety messages to avoid or reduce the risk of serious injury or death.

⚠ DANGER DANGER indicates an imminently hazardous situation which, if not avoided, will result in death or serious injury.

⚠ CAUTION CAUTION indicates a potentially hazardous situation which, if not avoided, may result in minor or moderate injury.

⚠ WARNING WARNING indicates a potentially hazardous situation which, if not avoided, could result in death or serious injury.

CAUTION CAUTION used without the safety alert symbol indicates a potentially hazardous situation which, if not avoided, may result in property damage.

To help you make informed decisions regarding safety, we have included instructions and information on labels. This information is provided with the intent to help avoid potential hazards that may harm you or others. It is, in no way, possible for us to inform you of every hazard you may come across with this product.

NOTE

If you have questions regarding your plow, we can help. Please call our help line at:
1-877-346-2050.

Safety Rules

⚠ WARNING

- Read this manual thoroughly before operating your plow. Failure to follow instructions could result in serious injury or death.
- Do not exceed 5 mph, even with blade raised.
- Make sure that all nuts and bolts are tightened per installation instructions.
- Never operate this KFI product with missing or damaged parts.
- Drive slowly over bumpy or rough terrain. Driving fast could cause damage to the winch (if applicable) or plow.
- Never raise the plow above point of contact as it could cause damage to machine or winch (if applicable).
- Always perform regular inspections and maintenance on plow tubes and hardware before use.
- Operate with extreme caution on slopes, steep grades, and rough terrain.
- Be aware of any possible hidden objects under the snow.
- Do not ram the blade into the pile.

⚠ CAUTION

- Take care when installing PLOW SPRINGS as they will be under tension.
- Use care when lifting components into place.

⚠ DANGER Never stand or ride on the plow.

Installation Instructions

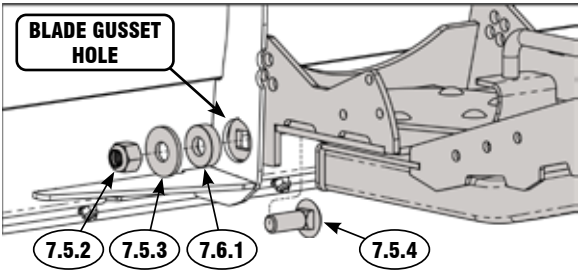

"Figure 1" Pivot Bolt Assembly

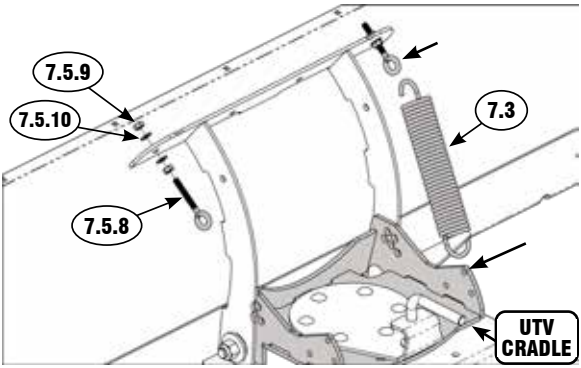

"Figure 2" Spring Assembly

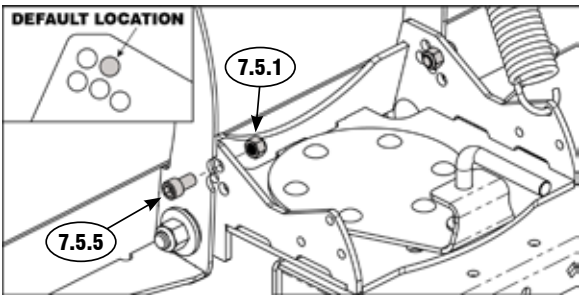

"Figure 3" Pitch Adjustment Bolt
(Spring not shown for clarity)

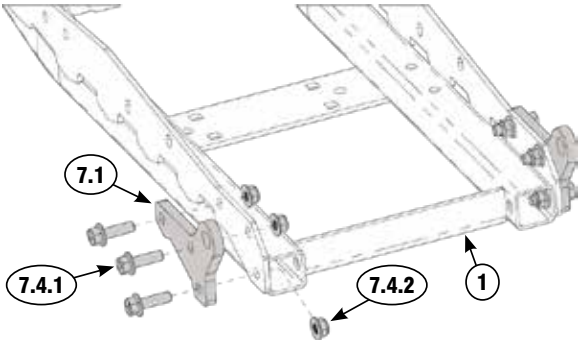

"Figure 4" Pin Attachment Brackets

1. Install the pitch bushing (Item 7.6.1) into the blade gusset hole with the countersunk side facing inward. Secure the tube system to the blade using carriage bolt (Item 7.5.4), washer (Item 7.5.3), and lock nut (Item 7.5.2) as shown in **Figure 1**. Repeat on the opposite side.

2. Install the plow springs (Item 7.3) into the upper rear holes of the UTV cradle as shown in **Figure 2**. Attach eyebolts (Item 7.5.8) to the ends of the springs and secure them to the blade gussets using nuts (7.5.9) and washers (7.5.10). Leave the spring tension loose at this time.

3. Assemble the plow on the machine and determine the desired blade pitch. Blade pitch controls the angle at which the cutting edge contacts the ground. Each pitch adjustment hole changes blade pitch by approximately 5°.

   Note: Figure 3 shows the default pitch position and is recommended for proper blade level.

4. With the springs installed and the blade held in the desired pitch position, install socket head cap screw (Item 7.5.5) and lock nut (Item 7.5.1) into the selected pitch adjustment hole.

5. Tighten the eyebolt nuts until the desired spring tension is achieved.

   Note: Every 1/4" of additional nut travel increases spring tension by approximately 8 lbs.

6. Install the pin attachment brackets (Item 7.1) to the push tubes (Item 1) using bolts (Item 7.4.1) and nuts (Item 7.4.2) as shown in **Figure 4**. **Torque hardware to 31 lb-ft.**

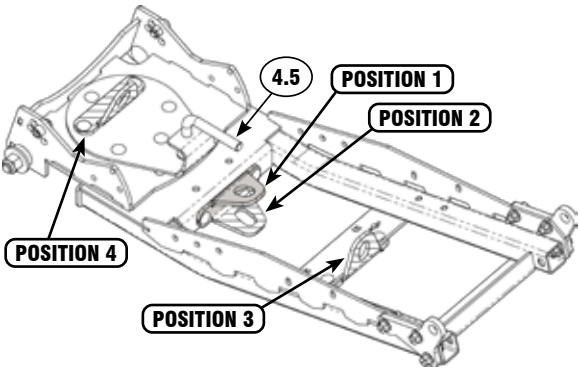

"Figure 5" Lift Hook Bracket Positions

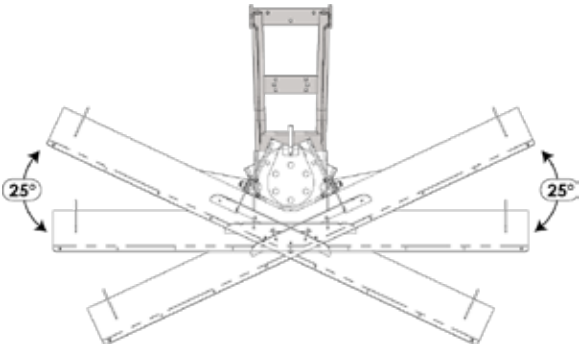

"Figure 6" Blade Rotation Angle

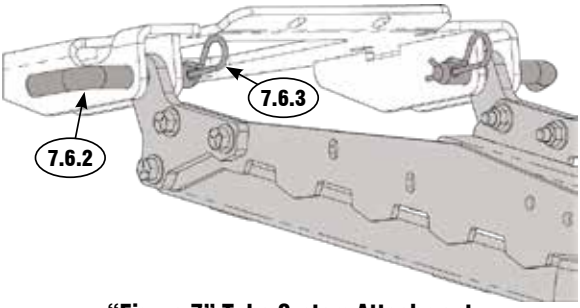

"Figure 7" Tube System Attachment

7. The tube system provides four lift hook bracket positions. See **Figure 5**. Select the position that provides the desired lift height and cable/rope angle.

   Position 1 – Default position.

   Position 2 – Uses the same mounting holes as Position 1, but with the bracket flipped over to provide additional winch clearance.

   Position 3 – Recommended for lower mounted winches. Install the lift hook bracket (4.5) on the underside of the push tube.

   Position 4 – Recommended for upper mounted winches or severe cable angles.

8. The tube system provides three blade angle positions in 25° increments. To change blade angle, pull the pull pin (**Figure 5**, Item 4.5) and rotate the blade left or right until the desired position is reached. See **Figure 6**.

9. To attach the tube system to a KFI mount, position the assembled tube system under the machine. Raise the tube attachment points to the mount and align the mounting holes. Insert hitch pin (Item 7.6.2) through the holes and secure with bridge pin clip (Item 7.6.3) as shown in **Figure 7**.

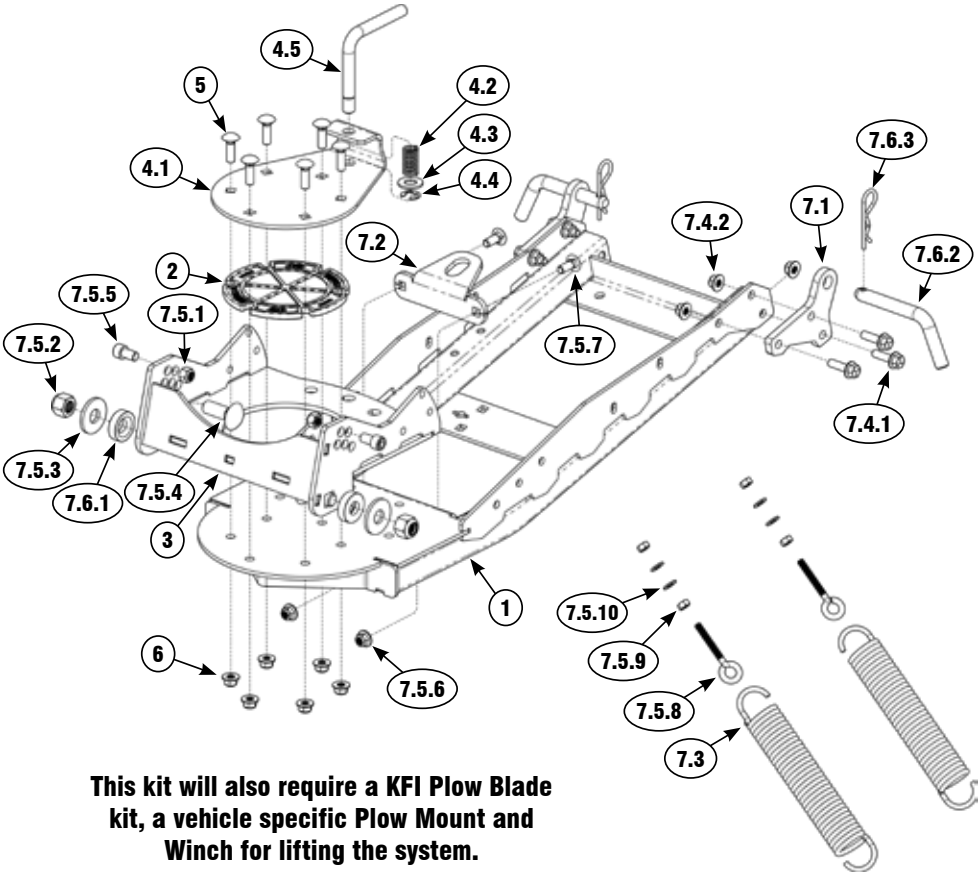

This kit will also require a KFI Plow Blade kit, a vehicle specific Plow Mount and Winch for lifting the system.

#106300 Parts List

Item #	QTY	Part #	Description
1	1	106301	UTV TUBE FRAME WLDMT
2	1	106218	PIVOT BUSHING RING
3	1	106561	UTV CRADLE
4	4	105139	LIFT LOCK LATCH ASSEMBLY
4.1	1	105025	LIFT LOCK PLATE
4.2	1	P800267	COMPRESSION SPRING
4.3	1	P890007	1/2" FLAT WASHER SAE
4.4	1	P800268	EXTERNAL RETAINING RING
4.5	1	105026	PULL PIN
5	6	P890000	3/8"-16 X 1-1/4" CARRIAGE BOLT GR5 ZINC
6	6	P890015	3/8"-16 HEX FLANGE LOCK NUT
7	1	106315	KIT - UTV PUSH TUBE PARTS
7.1	2	106302	PIN ATTACHMENT BRACKET
7.2	1	105138	LIFT HOOK BRACKET
7.3	2	P800304	PLOW SPRINGS
7.4	1	HK-398	HARDWARE KIT
7.4.1	6	HBF-5Z-038-16-125	3/8"-16 X 1 1/4" FLANGE HEX BOLT

Item #	QTY	Part #	Description
7.4.2	6	HNFN-5Z-038-16	3/8"-16 HEX FLANGE LOCK NUT
7.5	1	HK-365	HARDWARE KIT
7.5.1	2	HNN-5Z-044-14	7/16"-14 NYLOCK NUT
7.5.2	2	HNN-5Z-063-11	5/8"-11 NYLOCK NUT
7.5.3	2	FW-USS-Z-063	5/8" USS FLAT WASHER
7.5.4	2	CB-5Z-063-11-175	5/8"-11 X 1 3/4" CARRIAGE BOLT
7.5.5	2	SHS-Z-044-14-075	7/16"-14 X 3/4" HEX S.H.C. SCREW
7.5.6	2	HNFN-5Z-038-16	3/8"-16 HEX FLANGE LOCK NUT
7.5.7	2	CB-5Z-038-16-150	3/8"-16 X 1 1/2" CARRIAGE BOLT GR5 ZINC
7.5.8	2	P800249	5/16"-18 X 9/16" X 3 3/8" EYEBOLT
7.5.9	4	HN-5Z-031-18	5/16"-18 HEX NUT
7.5.10	4	FW-SAE-Z-031	5/16" FLAT WASHER, SAE
7.6	1	105213	KIT-UTV BUSHING/PINS
7.6.1	2	105214	PITCH BUSHING
7.6.2	2	P800558	5/8" HITCH PIN
7.6.3	2	P800559	BRIDGE PIN CLIP

2 Year Limited Warranty

Kappers Fabricating, Inc. (KFI) warrants to the original purchaser that the product is free from defects in materials and workmanship for a period of two (2) years from the original date of purchase. We will repair or replace, at our discretion, parts found to be defective due to materials or workmanship. This warranty is subject to the following limitations and exclusions:

Commercial Use: The warranty period for any product used for commercial or rental is limited to ninety (90) days from the date of original purchase.

Limitations: This warranty applies only to products which have been properly assembled, adjusted, and operated in accordance with the instructions contained within this manual. This warranty does not apply to any product of Kappers Fabricating, Inc. that has been subject to alteration, misuse, abuse, improper assembly or installation, or shipping damage.

Exclusions: Excluded from this warranty are normal wear, normal adjustments, and normal maintenance.

THIS WARRANTY DOES NOT APPLY TO ANY INCIDENTAL OR CONSEQUENTIAL DAMAGES AND ANY IMPLIED WARRANTIES ARE LIMITED TO THE SAME TIME PERIODS STATED HEREIN FOR ALL EXPRESSED WARRANTIES.

THE WARRANTY SET FORTH ABOVE IS THE ONLY WARRANTY. THERE ARE NO OTHER WARRANTIES, EXPRESS OR IMPLIED, INCLUDING BUT NOT LIMITED TO IMPLIED WARRANTIES OF MERCHANTABILITY OR FITNESS FOR A PARTICULAR PURPOSE.

Some states do not allow the exclusion of implied warranties or the exclusion or limitation of liability for incidental or consequential damages, or limitations on how long an implied warranty lasts, so the above limitation or exclusion may not apply to you. This warranty gives you specific legal rights. You may also have other rights that vary from state to state.

In the event you have a claim under this warranty, contact KFI's Technical Service and KFI will troubleshoot any issue via phone or e-mail. If the problem is not corrected by this method, KFI will, at its option, authorize evaluation, repair or replacement of the defective part or component at a KFI Service Center. KFI will provide you with a case number for warranty service. Please keep it for future reference. Repairs or replacements without prior authorization, or at an unauthorized repair facility, will not be covered by this warranty.

All transportation charges, damage, or loss incurred during transportation of parts submitted for replacement or repair under this warranty shall be borne by the purchaser. Should you have any questions concerning this warranty, please contact us toll-free at 1-877-346-2050. The model number, serial number (If applicable), date of purchase, and the name of the authorized KFI dealer from whom you purchased the product will be needed before any warranty claim can be processed.

For warranty inquiries outside the U.S.A. and Canada, contact your local dealer/distributor.

For countries not covered by a local dealer/distributor, please contact us at www.kfiproducts.com.

Product Registration

Please register your product with Kappers Fabricating, Inc. (KFI) within fifteen (15) days of purchase to assist us in handling any warranty issues that may arise by filling out this Registration card and submitting it with a copy of your sales receipt from one of KFI's official resellers.
Product registration can also be done online at www.kfiproducts.com/registration.html
Failure to complete and return this Registration card does not diminish your warranty rights.
Please refer to the above section for complete terms of this warranty.

WARRANTY IS NON-TRANSFERABLE

Please Print Clearly

Fill out and send this section to:
Kappers Fabricating, Inc.
Warranty Registration Department
1015 Industrial Drive, PO Box 32
Spring Valley, MN 55975, U.S.A.

Model #_____

Name_____

Street Address_____

City_____ State_____ Zip Code_____

Phone_____ Fax_____ Email_____

Date of Purchase_____ Authorized KFI Dealer Name_____

Kappers Fabricating, Inc.

1015 Industrial Dr.
Spring Valley, MN 55975

1-877-346-2050

©2026 Copyright Kappers Fabricating, Inc. All rights reserved

KUBOTA SIDEKICK 850 PLOW MOUNT

Plow Mount Part # 106025 Rev. C

Kit Components:

Item #	Qty.	Description
1	1	Plow Mount
2	2	Plow Mount Bracket
3	2	HK-001
3.1	4	5/16”-18 x 1.00 Hex Flange Bolt GR5
3.2	4	5/16”-18 Hex Flange Nylock Nut GR5
4	1	12” Soft Loop Strap

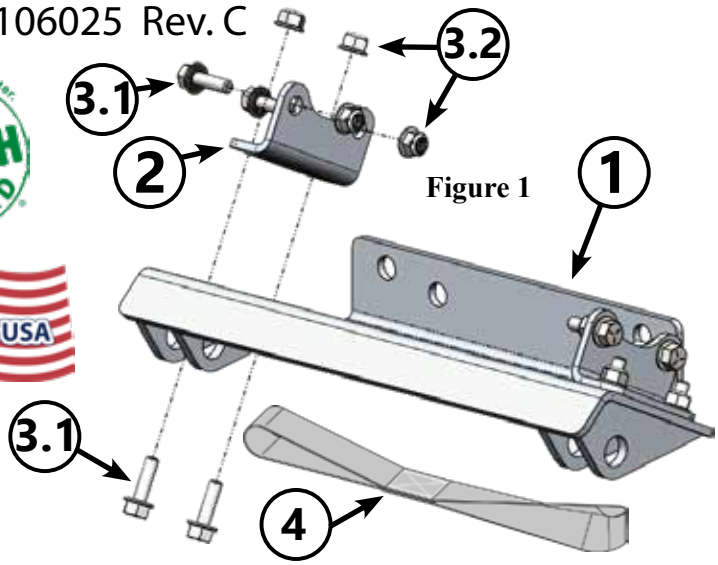

Figure 1

INSTALLATION INSTRUCTIONS:

Note: Make sure all of the hardware needed to complete this mount is in the package. Read through and understand the instructions before installing.

1. Bolt plow mount bracket (2) to plow mount (1) in place using 5/16” bolt (3.1) and 5/16” nut (3.2) as shown in Figure 1 & 2. Repeat step 1 for driver side.

2. Remove bolts (A) shown in Figure 3 and set aside to be re-installed in a later step.

3. Hold plow mount (1) in place and loosely secure to OEM front receiver using bolts (A) removed in step 2 as shown in Figure 4.

4. Bolt plow mount bracket (2) to OEM front receiver using 5/16” bolts (3.1) and 5/16” nuts (3.2) as shown in Figure 5. Repeat step 4 for driver side.

5. Tighten all hardware evenly.

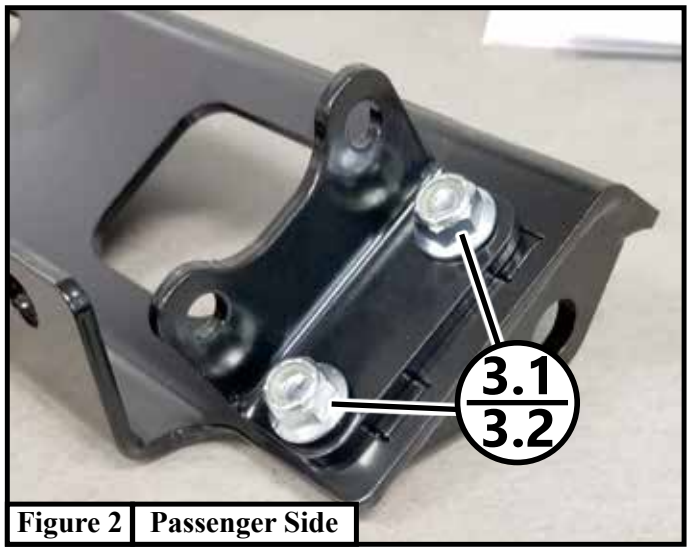

Figure 2 Passenger Side

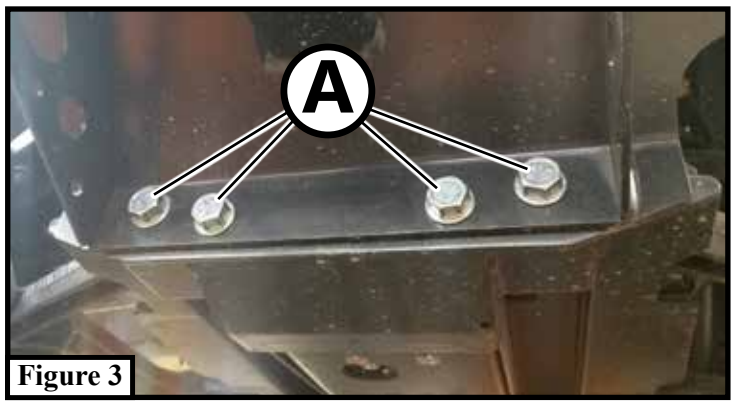

Figure 3

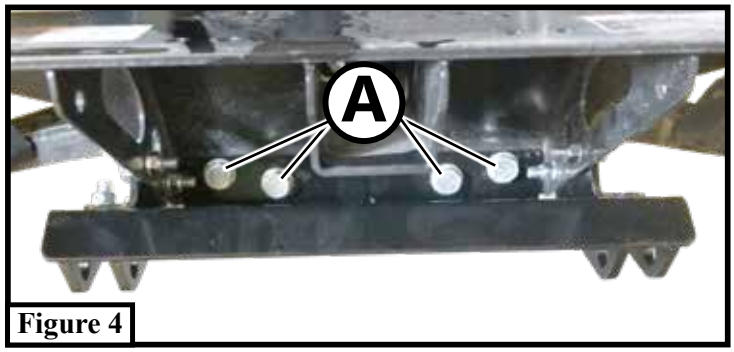

Figure 4

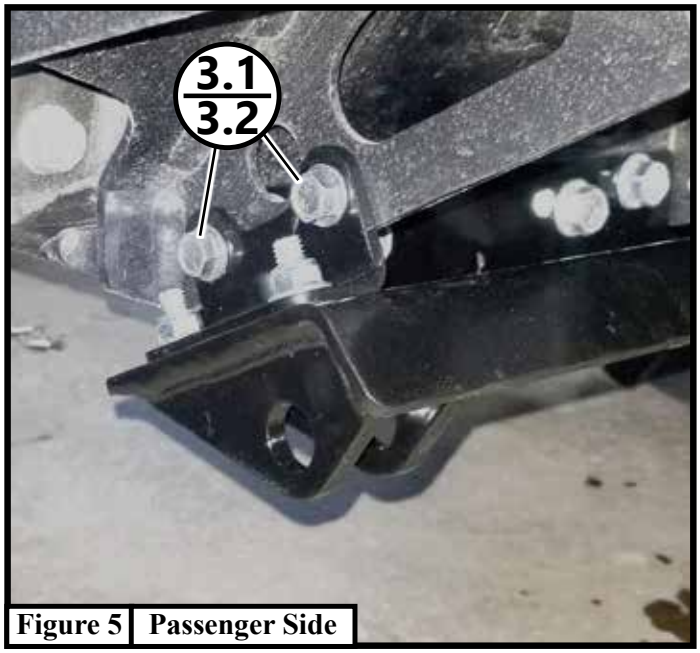

Figure 5 Passenger Side

©2019 Copyright - Kappers Fabricating, Inc. All rights reserved

THIS MOUNT RECOMMENDS A PLOW PULLEY

WHY USE A PULLEY WHEN PLOWING?

When the fairlead and plow pin point are too close, the winch line pulls at a shallow angle. This puts extra strain on the winch and makes lifting less effective. Adding a pulley gives the line a smoother, more vertical pull, improving lift and reducing stress on the winch and plow system. For more information, visit KFIproducts.com.

Steel Cable Winches

- *Plow Fairlead Pulley* at the winch
  - Standard or Wide
- *Quick Plow Pulley* (#106680) on the push tube
- Pulley rotates with winch cable
- Durable Steel Rollers

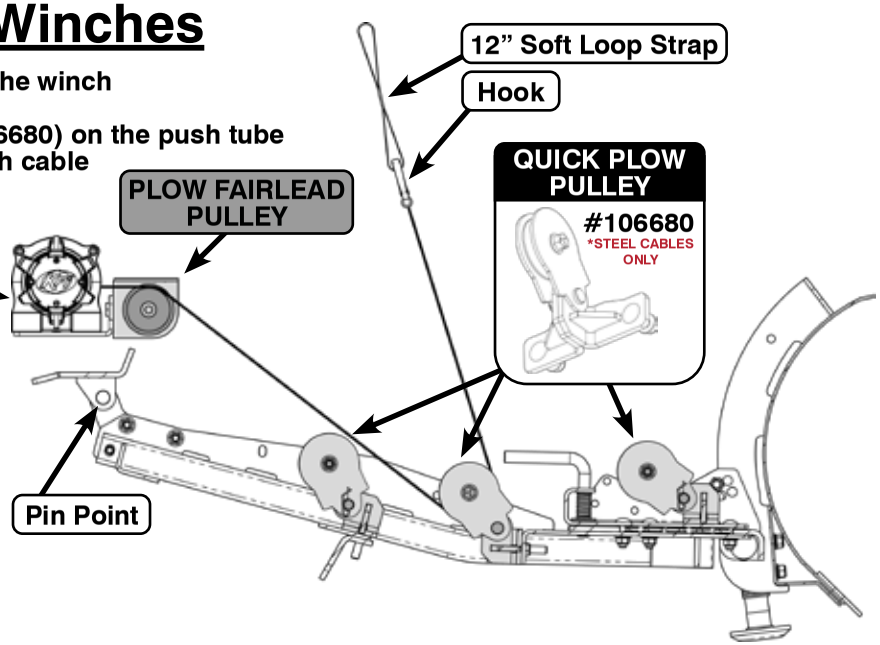

PLOW FAIRLEAD PULLEY

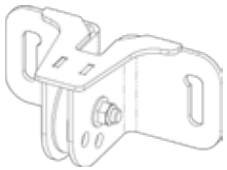

STANDARD: **#105270**
WIDE: **#105465**

Synthetic Cable Winches

- We *DO NOT* recommend using a Hawse Fairlead for plowing - Replace with a KFI Synthetic Roller Fairlead
- *Quick Plow Pulley* (#106745) on the push tube
- Pulley *does not* rotate with winch rope
- Aluminum Roller

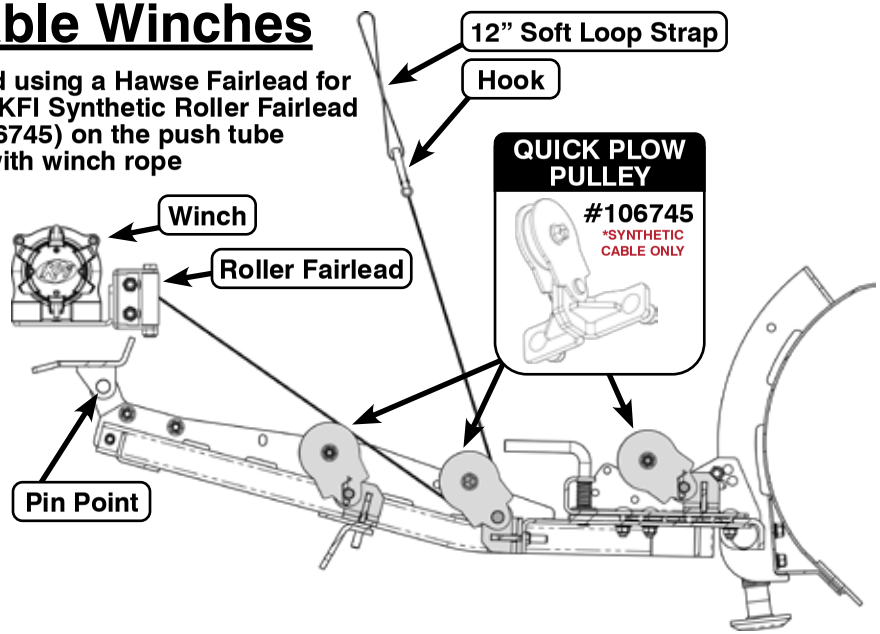

REPLACE HAWSE WITH ROLLER FAIRLEAD

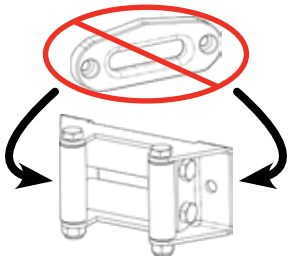

STANDARD: **#SE-RF**
WIDE: **#SE-WRF**

PUSH TUBE POSITIONS

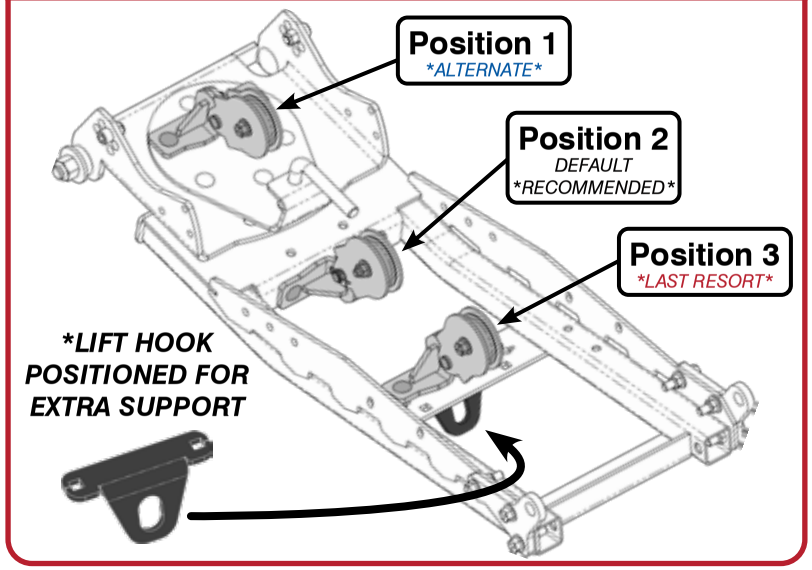

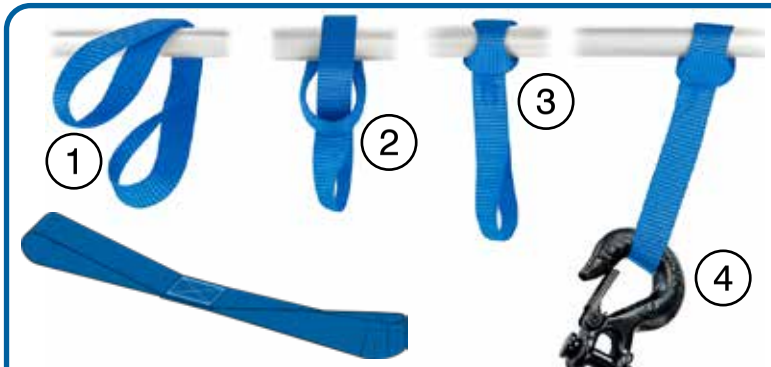

12" Soft Loop Strap #106470

The 12" Soft Loop Strap can be used in two configurations:

1. Wrapped once around a solid anchor point as shown above. Follow **Steps 1-4**.
2. Wrapped around the bumper in a "U" shape, allowing the hook to pass through both strap loops. See **Step 1 Only**.

©2025 Copyright Kappers Fabricating, Inc. All rights reserved

ATV WINCH

STEEL CABLE

MODEL #U45-R2

4,500 LB. (2041 KG)

OPERATOR'S MANUAL

READ AND SAVE THIS MANUAL. This manual contains important safety precautions which should be read and understood before operating the product. Failure to do so could result in serious injury. This manual should remain with the product. Specifications, descriptions, and illustrations in this manual are as accurate as known at the time of publication, but are subject to change without notice.

Place serial label here for reference.

SERIAL NO. LABEL

Support:

1-877-346-2050

or visit **www.kfiproducts.com**

Made in China - REV 20250224

KFI Products - Kappers Fabricating, Inc., Spring Valley, MN USA

TABLE OF CONTENTS

Introduction **1**
Accessories 1
This Manual 1
Safety Definitions **1**
Important Safety Instructions **2**
Controls and Features **4**
Installation **5**
Mount the Winch 5
Winch Assembly - Generic Install 5
Mount the Contactor 6
Install UTV Dash Mounted Rocker Switch 6
Mount the Hand Remote Socket 6
Wiring the Winch 7
Winch Wiring Diagram 8
Motor End Terminal Rotation 8
Controller Wiring Diagram 9
Cable Hook Stopper Installation and Use 9
General Tips for Safe Operation 10
Self Recovery 10
Winching Techniques 11
Snow Plow Usage 12
Maintenance **12**
Motor 12
Lubrication 12
Cable Assembly Replacement 12
Specifications **13**
Performance: 13
Parts Diagram 14
Parts List 15
Troubleshooting **16**
Warranty **17**
Contact Information 18

INTRODUCTION

Congratulations on your purchase of a KFI winch. KFI researches and develops winches to strict specifications. With proper use and maintenance, this winch will bring years of satisfying service.

Accessories

Kappers Fabricating, Inc. manufactures, purchases, and sells accessories designed to help you get the most from your purchase. To find out more about our products, visit our web site at:

www.kfiproducts.com

This Manual

Every effort has been made to ensure the accuracy and completeness of information in this manual. We reserve the right to change, alter, and or improve the product and this document at any time without prior notice.

Record the model as well as date and place of purchase for future reference. Have this information available when ordering parts and when making technical or warranty inquiries.

KFI TECHNICAL SUPPORT TEAM
1-877-346-2050
MODEL NUMBER
U45-R2
SERIAL NUMBER
DATE OF PURCHASE
PURCHASE LOCATION

SAFETY DEFINITIONS

The purpose of safety symbols is to attract your attention to possible dangers. The safety symbols, and their explanations, deserve your careful attentions and understanding. The safety warnings do not by themselves eliminate any danger. The instructions or warnings they give are not substitutes for proper accident prevention measures.

DANGER DANGER indicates a hazardous situation which, if not avoided, will result in death or serious injury.

WARNING WARNING indicates a hazardous situation which, if not avoided, could result in death or serious injury.

CAUTION CAUTION indicates a hazardous situation which, if not avoided, could result in minor or moderate injury.

NOTICE NOTICE indicates information considered important, but not hazard-related (e.g. messages relating to property damage or physical injury).

IMPORTANT SAFETY INSTRUCTIONS

WARNING Cancer and Reproductive Harm - www.P65Warnings.ca.gov

WARNING Read this manual thoroughly before operating the winch. Failure to follow instructions could result in serious injury or death.

WARNING Do not exceed the rated capacity.

DANGER Do not use this winch for lifting or moving people or animals.

DANGER Keep yourself and others a safe distance to the side of the cable when under tension.

DANGER Never step over a cable or near a cable under load.

WARNING The cable may break before the motor stalls. For heavy loads at or near rated capacity, use a pulley block/snatch block to reduce the load on the cable.

WARNING Do not move the vehicle to pull a load (towing) on the winch cable. This could result in cable breakage.

WARNING Pull only on area of the vehicle as specified by the vehicle manufacturer.

WARNING Do not use the winch to secure or hold a vehicle for a long period of time. Do not use the winch to secure a vehicle for transport.

WARNING Disconnect the remote control and battery leads when not in use for extended periods.

WARNING Avoid “shock loads” by using the control switch intermittently to take up slack in the cable. “Shock loads” can far exceed the rated capacity for the winch cable and drum.

Do not accelerate your vehicle while winching. Loss of traction can cause a shock load on the cable. Do not use cable as a pull strap.

WARNING Batteries contain acid and produce explosive gases. Keep sparks, flames and cigarettes away from batteries at all times. Wear safety glasses and protect the eyes at all times. Do not lean over the batteries during operation.

WARNING Do not use as a hoist. Do not use for overhead lifting.

WARNING When re-spooling the cable, ensure that the cable spools in the under-wind position with the cable entering the drum from the bottom, not the top.

To re-spool correctly, and while wearing gloves, keep a slight load on the cable while pushing the remote button to draw in the cable. Walk toward the winch not allowing the cable to slide through your hands. Do not let your hands get within 12 in. of the winch while re-spooling. Turn off the winch and repeat the procedure until a few feet of cable are left. Disconnect the remote control and finish spooling by rotating the drum by hand with the clutch disengaged. Keep hands clear of the fairlead and drum while the winch is under power.

CAUTION Use gloves to protect hands when handling the cable. Never let the cable slide through your hands.

CAUTION Do not wrap the cable around any object and hook it back onto itself.

CAUTION Apply blocks to the wheels of the vehicle when on an incline.

CAUTION Duration of winching pulls should be kept as short as possible.

If the motor becomes uncomfortably hot to the touch, stop winching immediately and let it cool down for a few minutes. Do not pull for more than one minute at or near the rated load.

CAUTION If the motor stalls, do not maintain power to the winch.

Electric winches are designed and made for intermittent use and should not be used in constant duty applications.

CAUTION Never release the free spool clutch when there is a load on the winch.

CAUTION Use the Hand-Saver strap when handling the winch hook for spooling or unspooling the cable.

CONTROLS AND FEATURES

Read this operator's manual before operating your winch. Familiarize yourself with the location and function of the control features. Save this manual for future reference.

Winch

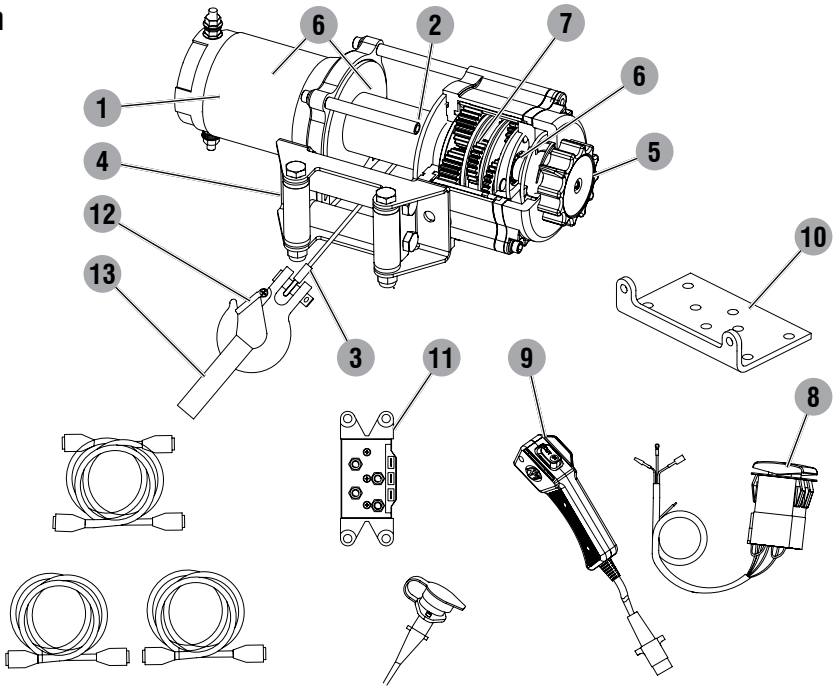

1. **Motor** – 1.70 HP 12V DC motor provides power to the planetary gear mechanism.
2. **Winch Drum** – The winch drum is the cylinder on which the cable is stored. It can feed or wind the cable depending on the switch assembly.
3. **Steel Cable** – 15/64 in. x 38 ft. Galvanized aircraft cable designed specifically for load capacity of 4,500 lbs. (36 usable feet with five wraps on the drum). The cable feeds onto the drum in the "under wind" position through the roller fairlead (4) and is looped at the end to accept the clevis hook pin (12).
4. **Roller Fairlead** – When using the winch at an angle the roller fairlead acts to guide the steel cable onto the drum and minimize damage to the cable from abrasion on the winch mount or bumper.
5. **Free Spooling Clutch** – The clutch allows the operator to manually disengage ("Release") the spooling drum from the gear train. Engaging the clutch ("Engage") locks the winch into the gear system.
6. **Braking System** – Braking action is automatically applied to the winch drum when the winch motor is stopped or there is a load on the cable.
7. **Planetary Gear System** – The reduction gears convert the winch motor power into extreme pulling forces. This system allows high torque while maintaining compact size and light weight.
8. **UTV Dash Mounted Rocker Switch** – Premium look & quality dash mounted switch for easy access.
9. **Hand Held Remote** – Hand held switch with a remote socket for powering the cable in or out of your winch drum.

10. **Fairlead Mount** – Adapter to mount the winch and fairlead for utility applications.

11. **Contactor** – Power from the vehicle battery flows through the weather sealed solenoid switch before being directed to the winch motor.

12. **Clevis Hook** – Provides a means for connecting the looped ends of cables to an anchor.

13. **Hand Saver Strap** – Used to assist cable feed.

INSTALLATION

This KFI 4,500 lb winch is designed with a bolt pattern that is standard for this class of winch. Many winch mounting kits are available that utilize this bolt pattern for the most popular ATVs and UTVs. You can find most of the ATV/UTV winch mounts on our website (www.kfiproducts.com).

Mount the Winch

WARNING Before starting to install this winch, disconnect the vehicle ground and positive leads from the battery.

1. Install the winch and fairlead with the supplied hardware per the instructions provided with the model specific winch mounting kit or prepare a flat, secure mounting location for the winch.

CAUTION Mounting bolts must be SAE Grade 5 or better and torqued to 17 ft. lbs.

NOTICE This kit includes mounting bolts with different lengths for fastening the winch (M8 x 20, 25, and 30mm long). Use the length that best fits your mounting application. Refer to vehicle specific mount instructions for more information.

CAUTION If you choose not to use a model specific mounting kit, you will need to drill holes in the structural support of the vehicle. Be certain that your structural support is sufficient for the pulling forces of this winch.

2. Attach the winch using supplied M8 x 25mm or 30mm bolts and washers thru the fairlead bracket or model specific winch mount and into the winch.

3. Disengage the clutch by rotating the clutch cap to the RELEASE position. Release the synthetic cable and pull through the roller fairlead.

4. Attach the clevis hook to the cable and the hand saver strap to the clevis hook.

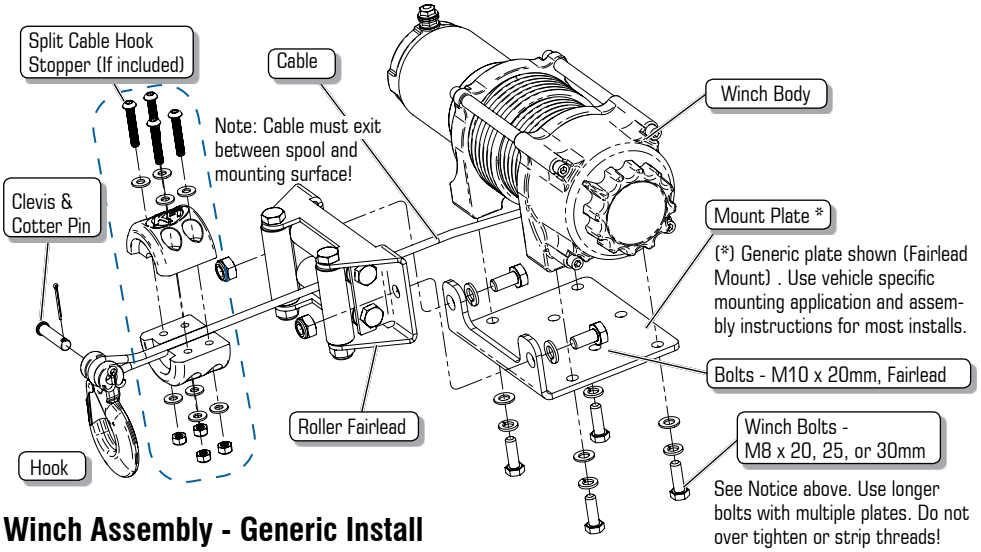

Winch Assembly - Generic Install

Mount the Contactor

5. Find a location for the contactor. If the model specific mounting kit does not indicate a recommended contactor location, then it is recommended that the contactor be mounted close to the battery in a clean dry location. Be certain the location you choose allows for sufficient clearance form all metal components. Drill mounting holes if required. Once a location is found, do not install until all wiring is completed.

Install UTV Dash Mounted Rocker Switch

6. Most UTV's & SxS's have a predefined switch location that is scored or marked for mounting and requires finish cutting with a knife.

7. Use the cut-out dimensions shown below to cut the switch location pattern if your dash doesn't have a predefined knockout or area.

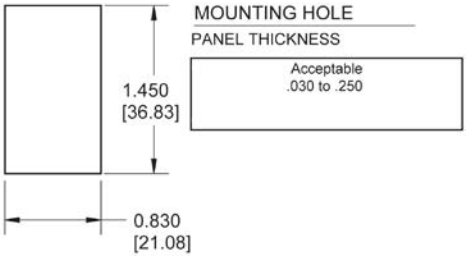

8. Once your switch is mounted you can route wires back to the contactor location.

9. Splice the end of the red wire to an ignition controlled (keyed) power source using the supplied wire splice. You may need to use a test light or multimeter to locate a suitable wire. The wire should only have power when the key is in the ON position.

Mount the Hand Remote Socket (optional)

10. Determine a mounting location for the Hand Remote

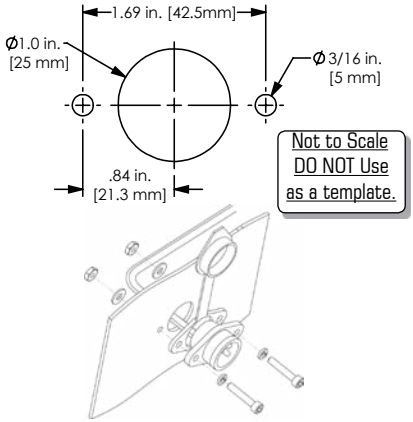

socket. Be certain the area behind the selection location is clear.

11. Drill three holes as shown in the following figure and install using supplied hardware. You can also use the rubber cap attached to the remote socket as a template.

12. Once your remote socket is mounted, you may route wires back to the contactor location.

13. Splice the end of the red wire to an ignition controlled (keyed) power source using the supplied wire splice. You may need to use a test light or multimeter to locate a suitable wire. The wire should only have power when the key is in the ON position.

14. Secure the wires with supplied cable ties.

Wiring the Winch

CAUTION Never route electrical wires across any sharp edges, through or near moving parts, or near parts that become hot.

15. Connect the yellow and blue wires to the motor terminals on the winch. Torque the nuts on the motor to 5.7 N-m (50 in lbs) Route the opposite ends to the contactor location. (See diagram on page 8).
16. Connect the yellow and blue wires to the contactor block (yellow to yellow, blue to blue). DO NOT tighten nuts. (See diagram page 8).
17. Connect the red and black wires to your contactor block (red to red, black to black). DO NOT tighten nuts. Route the opposite ends to the battery location (See diagram page 8).
18. Connect the mini rocker switch to the contactor block (black to black, green to green). (See diagram on page 9).
19. Once all wiring is connected to the contactor, finish mounting it to the contactor location using supplied M6 hardware (See diagram page 8).

WARNING Failure to follow specific wiring instructions may result in damage to your wiring system or equipment.

NOTICE Depending on the location of the contactor, you may need to use an alternate winch wiring configuration. Please see the "Alternate Winch Wiring Diagram" available on: www.kfiproducts.com

20. Torque the contactor terminal nuts to 4.5 N-m (40 in lbs) Do NOT over tighten.
21. Place all terminal boots over terminals and secure all cables with zip ties or electrical tape.

NOTICE If you are installing the hand remote along with the mini rocker switch, you will need to connect the remote socket to the contactor and then the mini rocker switch to the remote socket (see diagram on page 9).

22. Connect the battery leads from the contactor to the vehicle's battery (black to black, and red to red, see diagram on page 8).
23. Check for proper drum rotation. Turn the clutch cap to the RELEASE position. Pull out some cable from the drum and then turn the clutch cap to the ENGAGE position to engage the gears. Make sure your vehicle is running and press the cable out button on the switch. If the spool is turning and releasing more cable, then your connections are accurate. If the spool is turning and collecting more cable, then reverse the leads on the motor. Repeat and check rotation.

CAUTION Battery cables should not be drawn taut. Leave some slack for cable movement.

NOTICE Always hold the bottom nut with a wrench while tightening motor wire terminals. Do not allow the bottom nut to spin, else you may damage the end cap.

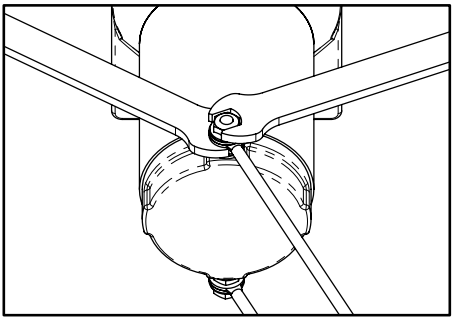

Proper Terminal Tightening

Winch Wiring Diagram

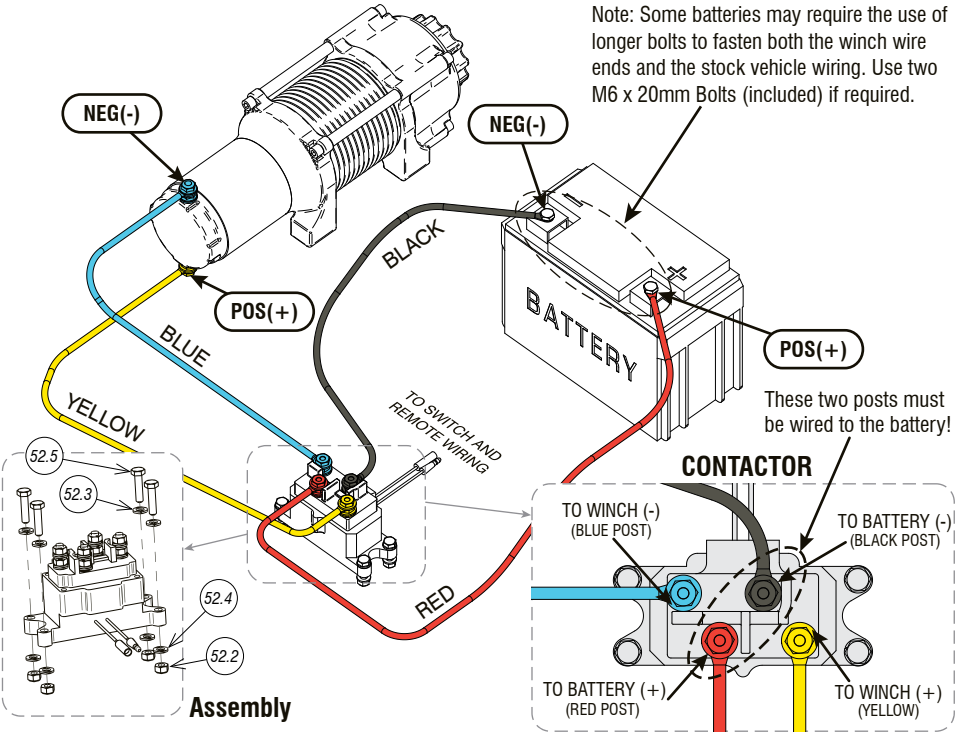

Motor End Terminal Rotation

With some applications, the motor terminals may need to be rotated to avoid interference with other components. If rotation is required please give us a call at 1-877-346-2050 for instructions or visit our website at www.kfiproducts.com and look in the support section.

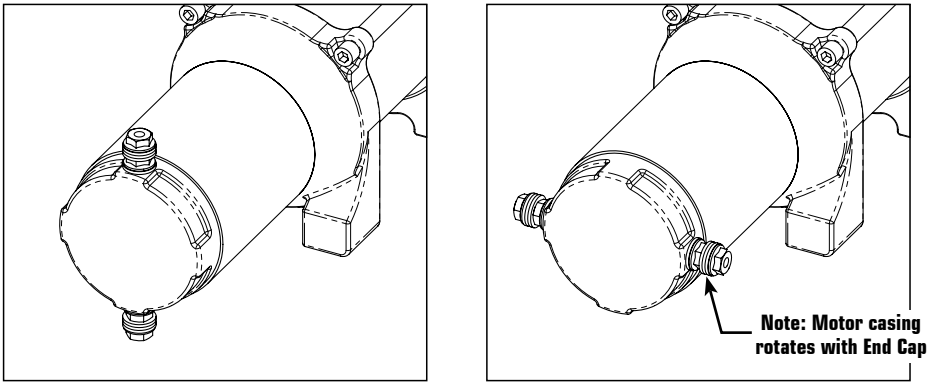

LEADS AT DEFAULT POSITION → LEADS ROTATED 90°

Controller Wiring Diagram

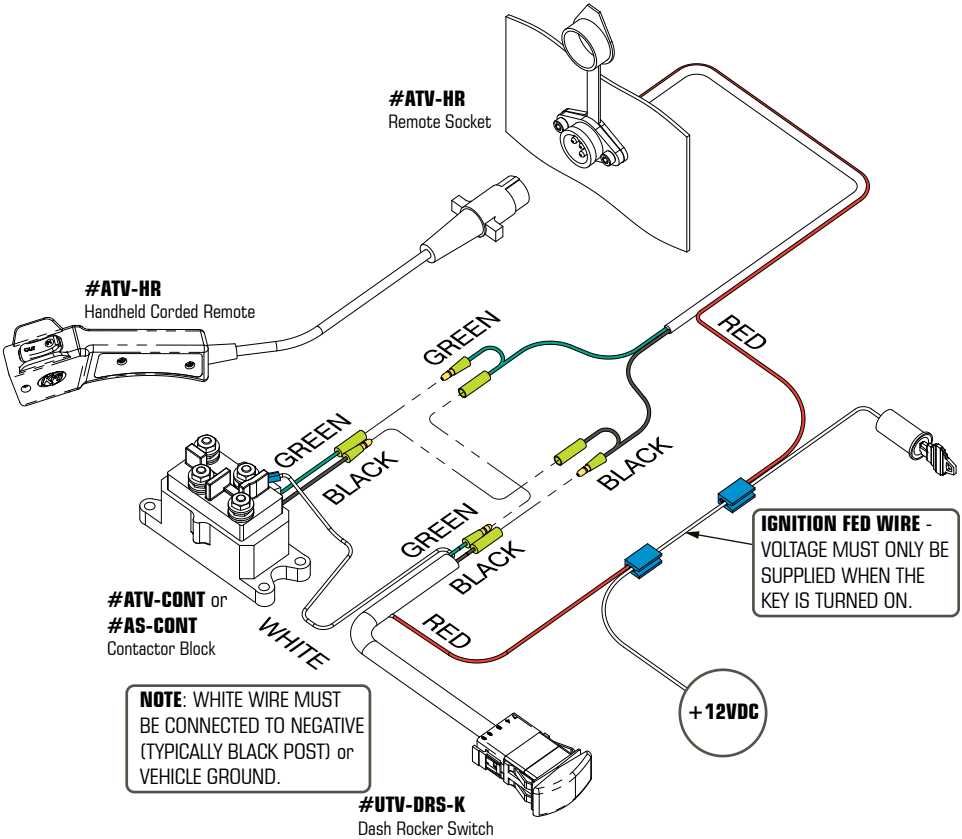

Cable Hook Stopper Installation and Use (Optional Accessory, Not Included)

1. Release winch and pull out approximately 2 feet of cable.
2. Assemble cable hook stopper as shown in diagram with the flat portion of the two halves resting against your fairlead. Tighten fasteners.
3. To stow hook, engage clutch and retract cable onto winch spool until hook is snug against the hook stopper and fairlead.
4. Position cable hook stopper at approx. 3/4 of the total line distance towards the hook while using your winch to help reduce whip back in the event of cable breakage.

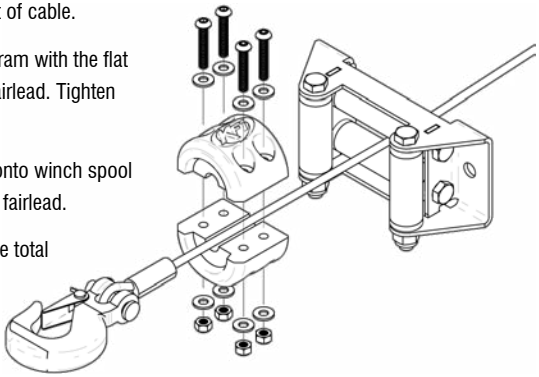

General Tips for Safe Operation

Your U45-R2 winch is rated at 4,500 lbs. capacity in first layer (max) when spooling the first cable layer on the drum. Overloads can damage the winch, motor and/or cable.

The vehicle engine should be kept running during operation of the winch to minimize battery drain and maximize power and speed of the winch. If the winch is used for a considerable time with the engine off the battery may be drained and too weak to restart the engine.

Get to know your winch before you actually need to use it. We recommend that you set up a few test runs to familiarize yourself with rigging techniques, the sounds your winch makes under various loads, the way the cable spools on the drum, etc.

Inspect the cable and equipment before each use. A frayed or damaged cable should be replaced immediately. Use only manufacturer's identical replacement cable with the exact specifications.

Inspect the winch installation and bolts to ensure that all bolts are tight before each operation.

Store the remote control inside your vehicle in a place that it will not be damaged.

Any winch that appears to be damaged in any way, is found to be worn, or operates abnormally MUST BE REMOVED FROM SERVICE UNTIL REPAIRED. It is recommended that the necessary repairs be made by a manufacturer's authorized repair facility.

Pull only on areas of the vehicle as specified by the vehicle manufacturer.

Only attachments and/or adapters supplied by the manufacturer are to be used.

Self Recovery

Locate a suitable anchor such as a strong tree trunk or boulder. Always use a sling as an anchor point.

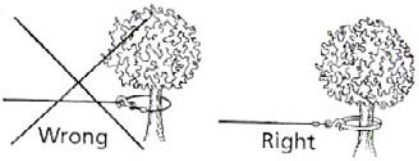

Your winch is equipped with a roller fairlead to help guide the cable and to reduce binding on short side pulls.

Do not winch from an acute angle as the cable will pile up on one side of the drum causing damage to cable and the winch.

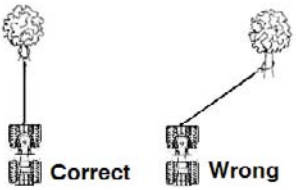

Short pulls from an angle can be used to straighten the vehicle. Long pulls should be done with the cable straight out from the winch/vehicle.

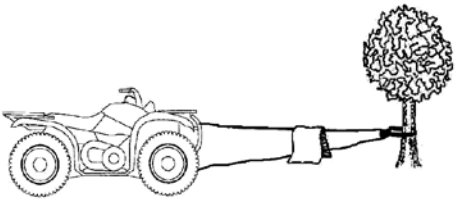

When pulling a heavy load, place a cable hook stopper, blanket or jacket over the cable five or six feet from the hook.

In the event of a cable snap it will dampen the snap back. For additional protection open the hood of the vehicle.

Winching Techniques

1. Take time to assess your situation and plan your pull.
2. Put on gloves to protect your hands.
3. Release the clutch and free-spool the winch; it's faster than using the switch and saves battery power.
4. Attach the hook strap to the clevis hook.
5. Pull out the cable to your desired anchor point using the hook strap.
6. Secure the clevis hook to the anchor point: Sling, chain or snatch block. Do not attach the hook back onto the cable.
7. Engage the clutch.
8. Start your engine to ensure power is being replenished to the battery.
9. Power in the cable guiding the cable under tension to draw up the slack in the cable. Once the cable is under tension, stand clear. Never step over the cable.
10. Double check your anchors and make sure all connections are secure.
11. Inspect the cable. Make sure there are at least 5 wraps of cable around the winch drum.
12. Place a Cable Hook Stopper over the cable approximately 5 to 6 feet from the hook.
13. Clear the area. Make sure all spectators stand clear and that no one is directly in front or behind the vehicle or anchor point.
14. Begin winching. Be sure that the cable is winding evenly and tightly around the drum. The vehicle that is being winched can be slowly driven to add assistance to the winching process. Avoid shock loads; keep the cable under tension.
15. The vehicle to be winched should be placed in neutral and the parking brake released. Only release the loads to the winch. This can damage the winch, cable and vehicle.
16. The winch is meant for intermittent use. Under full load with a single line rig do not power in for more than a minute without letting the motor cool down for a few minutes and then resume the winching operation.
17. The winching operation is complete once the vehicle is on stable ground and is able to drive under its own power.
18. Secure the vehicle. Be sure to set the brakes and place the vehicle in park.
19. Release the tension on the cable. The winch is not meant to hold the vehicle for long periods of time.
20. Disconnect the cable from the anchor.
21. Rewind the cable. Make sure that any cable already on the drum has spooled tightly and neatly. If not, draw out the cable and re-spool from the point where the cable is tight.
22. Keep your hands clear of the winch drum and fairlead as the cable is being drawn in.
23. Secure the hook and hook strap.
24. Disconnect the remote control and store in a clean, dry place.
25. Clean and inspect connections and mounting hardware for next winching operation.
26. Never use the winch as a tie down.
27. Use brake pedal when under full tension.

Snow Plow Usage

Winches are commonly used to lift a Snow Plow System, but precautions and correct usage are required to prevent costly damage.

NOTICE Follow these precautions before using your Winch to lift a Plow. Failure to do so may result in damage to your winch or vehicle frame.

1. Stop the plow before full lift height - failure to do so will cause the winch to pull against itself (i.e. “bottom out”) and will cause damage to the winch components, your plow frame and your vehicle frame.

NOTICE Winch damage such as stripped gears, broken housings and bent or damaged parts caused by exceeding your plow’s lift height are not covered under warranty.

2. Do not continue to hold the Spool In button to power the winch while reversing your vehicle or other instances where the operator may become distracted while plowing.

MAINTENANCE

The owner/operator is responsible for all periodic maintenance.

Complete all scheduled maintenance in a timely manner. Correct any issue before operating the winch.

WARNING Never operate a damaged or defective winch.

WARNING Improper maintenance will void your warranty.

NOTICE For service or parts assistance, contact our help line at 1-877-346-2050.

Motor

Periodically when not used very often, or after wet / damp conditions. Be sure to run the motor in free spool until the motor is warm. This helps dry out any moisture and condensation trapped inside the housing.

Lubrication

All moving parts within the Electric Winch have been Lubricated using high temperature lithium grease at the factory. No internal lubrication is required under normal conditions.

If the winch is subjected to extreme conditions lubrication may be required using a high temperature lithium grease. Retract Cable Assembly onto drum being careful not to allow kinking or over heating of the winch.

Cable Assembly Replacement

It is recommended that any modifications be performed by a manufacturer’s authorized repair facility, and that only manufacturer-supplied parts be used

1. Rotate the clutch cap to the “Release” position.
2. Extend Cable Assembly to its full length. Note how the existing cable is connected to the inside of the drum.
3. Remove old Cable Assembly and attach new one.
4. Rotate the clutch cap to the “Engage” position.

NOTICE Inspect cable before and after each use. If cable becomes frayed it must be replaced.

SPECIFICATIONS

Performance:

Rated Pull ..... 4,500 lb (2041 kg)

Gear Reduction Ratio 166:1

Motor.....Permanent Magnet, 1.70 HP (DC 12V)

Drum Size..... 2.00 x 3.19 in. (50.8 x 81 mm)

Cable Dimensions .... 15/64 in. x 38 ft. (6.0mm x 11.6m)

Gross Weight ..... 36.4 lb. (16.5 kg)

Mounting Bolt Pattern.....
4.88 in. x 3.00 in. (12.4 cm x 7.6 cm)

Overall Dimensions .....
14.6 in. (L) x 4.55 in. (W) x 4.82 in. (H)
(37.1 cm x 11.6 cm x 12.3 cm)

Line Speed and Motor Current (First Layer)						
Line Pull	LB	0	1000	2000	3000	4500
	KG	0	454	907	1361	2041
Line Speed (12 VDC)	FPM	12.8	9.8	8.5	6.9	4.6
	MPM	3.9	3.0	2.6	2.1	1.4
Max Current	A	28	80	130	180	280
Run Time *	Minutes	1	1	1	1	1
Cooling Time **	Minutes	5	5	5	5	5

** If the motor becomes uncomfortably hot to the touch, stop winching immediately and let it cool down for 5 minutes. Do not pull for more than one minute at or near the rated load.*

*** Electric winches are designed and made for intermittent use and should not be used in constant duty applications.*

Line Pull and Cable Capacity Per Layer					
Layers of Cable on Drum		1	2	3	4
Rated Line Pull	LB	4500	3715	3163	2754
	KG	2041	1685	1435	1249
Cable Capacity	FT	7.6	16.8	27.6	38
	M	2.3	5.1	8.4	11.6

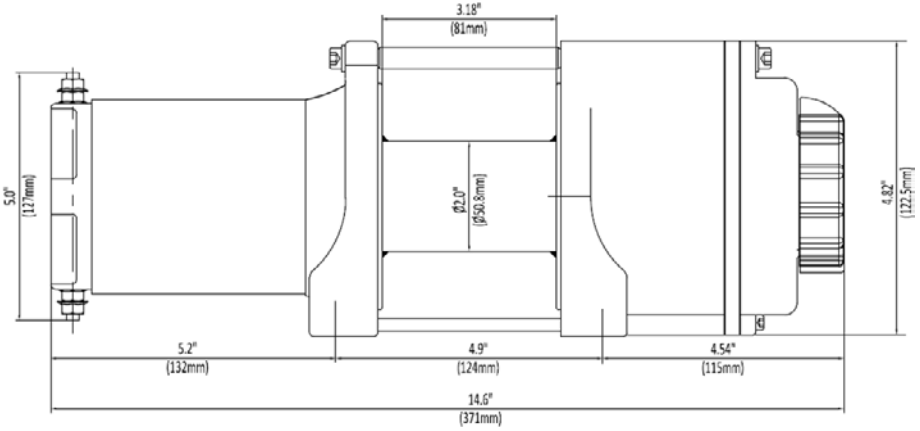

Parts Diagram

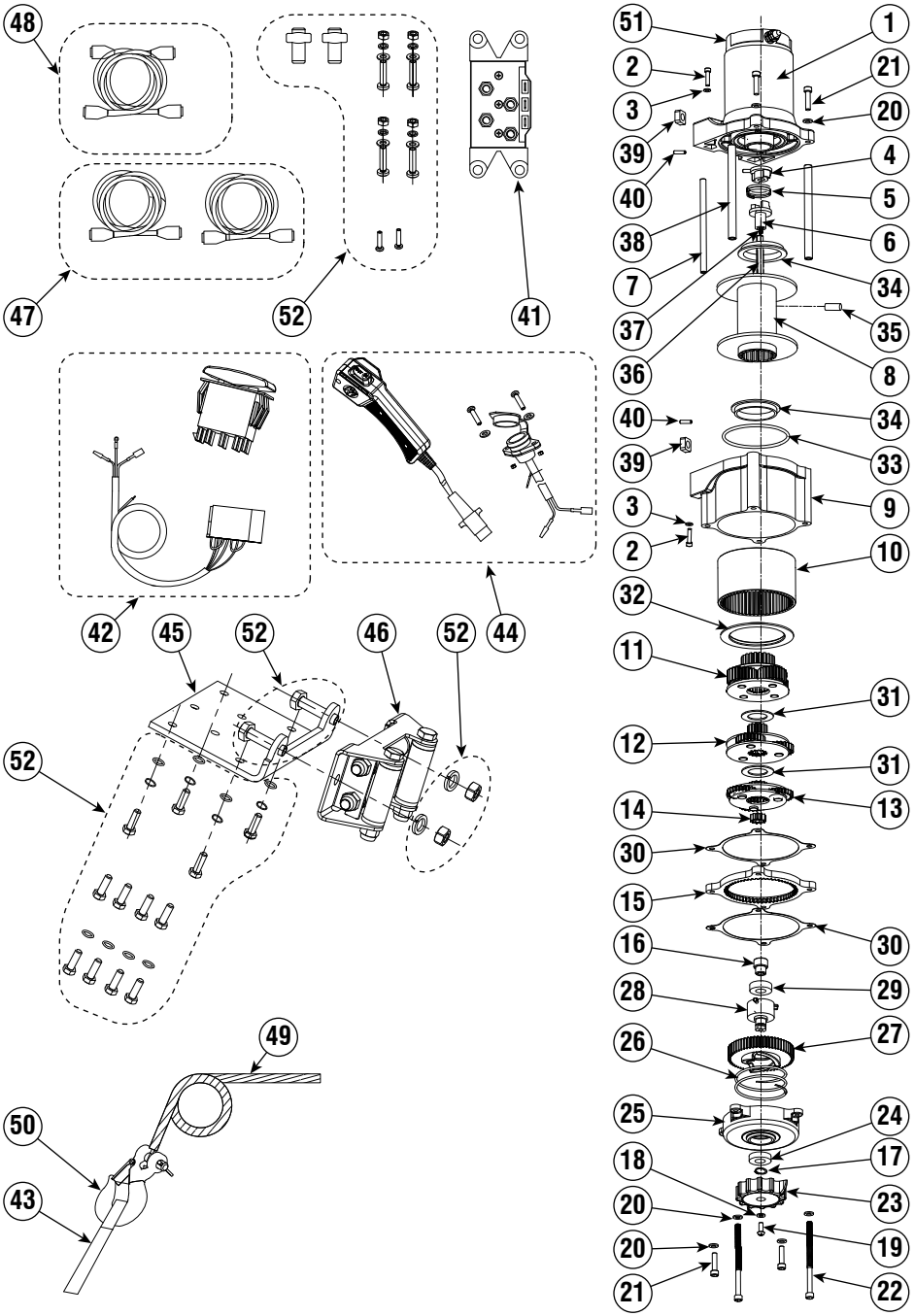

Parts List

#	Part Number	Description	Qty
1	MOTOR-45-BL	Motor Assembly	1
2	HW-0019	Screw M4 x 25 Socket	2
3	HW-0020	Lock Washer Ø4	2
4	WP-0026	Coupling, I	1
5	WP-0027	Spring, Coupling	1
6	WP-0028	Coupling, II	1
7	WP-0029	Tie Bar Ø8 x 86	1
8	WP-0051	Drum, Steel, Standard	1
9	WP-0031	Gear Housing	1
10	WP-0032	Gear Ring	1
11	WP-0033	Gear Carrier Asm, Output	1
12	WP-0034	Gear Carrier Asm, Inter	1
13	WP-0035	Gear Carrier Asm, Input	1
14	WP-0036	Gear, Input, Sun	1
15	WP-0037	Gear, Fixed	1
16	WP-0038	Bushing, Clutch	1
17	HW-0004	Circlip Ø15	1
18	HW-0006	Washer Ø6 Lock	1
19	HW-0007	Screw M6 x 16 Phillips	1
20	HW-0003	Washer Ø6	6
21	HW-0021	Screw M6 x 25 Socket	4
22	HW-0022	Screw M6 x 100 Socket	2
23	WP-0001	Clutch Cap	1
24	WP-0015	Bearing 16002 Sealed	1
25	WP-0039	Clutch Cover	1
26	WP-0013	Spring, Clutch	1
27	WP-0040	Cam, Clutch Gear	1
28	WP-0016	Bushing, Axis Support	1
29	WP-0017	Bearing 6002 Sealed	1
30	WP-0041	Seal	2
31	WP-0042	Washer, Friction	2
32	WP-0043	Retaining Ring	1
33	WP-0044	O-Ring Seal	1
34	WP-0045	Bushing, Drum	2
35	WP-0008	Set Screw M5 x 8	1
36	WP-0046	Shaft, Hexagon, H8 x 150	1
37	WP-0047	Spring, Shaft	1
38	WP-0048	Tie Bar Ø10 x 86	2
39	WP-0049	Square Nut	4
40	WP-0050	Pin, Spring, Ø3 x 14	4
41	ATV-CONT	Contactor	1
42	UTV-DRS-K	UTV Dash Rocker Switch Kit	1

#	Part Number	Description	Qty
43	WP-0030-BLU	Hand Saver Strap, Blue	1
44	ATV-HR	Hand Remote Asm	1
45	100495	Bracket, Fairlead, Standard	1
46	ATV-RF	Roller Fairlead	1
47	SE-WIRES-UTV-WIN	Wiring, Winch, UTV	1
47.1	WP-0092	Terminal Protector	4
48	SE-WIRES-UTV-BAT	Wiring, Battery, UTV	1
48.1	WP-0092	Terminal Protector	4
49	UTV-CBL-4K	Cable, Steel, 15/64" x 38'	1
50	SE-HOOK	Clevis Hook, 1/4"	1
51	SE-U-CAPKIT	Motor End Cap Assembly	1
52	HK-500	Hardware Kit, Black	1
52.01	HW-0001	Wire Tap	2
52.02	HW-0014-B	Nut M6 Nylock	4
52.03	HW-0006-B	Washer Ø6 Lock	4
52.04	HW-0003-B	Washer Ø6	4
52.05	HW-0013-B	Bolt M6 x 25	4
52.06	HW-0015-B	Bolt M6 x 20	2
52.07	HW-0010-B	Bolt M10 x 20	2
52.08	HW-0011-B	Washer Ø10 Lock	2
52.09	HW-0012-B	Nut M10 Nylock	2
52.10	HW-0016-B	Washer Ø8	8
52.11	HW-0009-B	Washer Ø8 Lock	4
52.12	HW-0008-B	Bolt M8 x 25	4
52.13	HW-0018-B	Bolt M8 x 20	4
52.14	HW-0017-B	Bolt M8 x 30	4

TROUBLESHOOTING

Problem	Cause	Solution
Motor does not run, Contactor makes a click sound.	Incorrect Wiring	Check Winch Wiring Diagram, make sure all wires are correctly connected.
	Incorrect Wiring	Hand Remote / Mini Rocker Switch wires must be connected green to green and black to black.
	Loose battery cable connections	Hand tighten nuts on all cable connections.
	Motor Issue	Contact KFI Technical Support
	Water has entered motor	Allow to drain and dry. Run in short burst with load until completely dry.
	Brake Spring installed backwards	Contact KFI Technical Support.
Motor does not run, NO click sound from Contactor.	Incorrect Wiring	Check Winch Wiring Diagram, make sure all wires are correctly connected.
	Switch Ignition Wire	Check connection to an ignition fed source. Must supply 12V with the key on and vehicle running.
	Contactor malfunctioning	Contact KFI Technical Support.
	Switch malfunctioning	Contact KFI Technical Support.
Motor runs, Spool turns in one direction only.	Incorrect Wiring	Check wiring diagram, verify switch wires (black/green) are properly connected and making good contact.
	Defective or stuck Contactor	Tap contactor to loosen plungers.
	Defective Switch assembly	Replace Switch assembly.
	Contactor malfunctioning	Contact KFI Technical Support.
Motor runs, Spool does NOT turn.	Clutch not engaged	Rotate Clutch Cap to Engage.
	Broken Coupler / stripped Shaft	Replace Coupler or Shaft
Spool turns, but no movement from Cable	Cable not attached to Spool	Contact KFI Technical Support.
Motor runs slowly or without normal power.	Insufficient current or voltage.	The battery is weak, recharge. Run winch with vehicle motor running (battery should have a strong charge).
	Loose or corroded battery cable connections	Clean, tighten, or replace.
	Worn Brushes	Replace with End-Cap Kit (#SE-U-CAPKIT) Contact KFI Technical Support.
Motor overheating	Winch running time too long	Allow winch to cool down periodically.

For further support, contact:

KFI Tech Support

Mon-Thr 8:00 AM - 5:00 PM (CST/CDT)
Fri 7:00 AM - 1:00PM (CST/CDT)
Toll Free: 1-877-346-2050
tech@kfiproducts.com

KFI Products Website Support:

Common installation, maintenance, and troubleshooting guides are available on our website.

https://www.kfiproducts.com/support.html

WARRANTY

KAPPERS FABRICATING, INC.
1 YEAR LIMITED LIFETIME WARRANTY

Warranty Qualifications

Kappers Fabricating Inc. (KFI) will register this warranty upon receipt of your Warranty Registration Card and a copy of your sales receipt from one of KFI's resale locations as proof of purchase. Please submit your warranty registration and your proof of purchase within Fifteen (15) days of the date of purchase.

Repair/Replacement Warranty

KFI warrants to the original purchaser that mechanical components will be free of defects in material and workmanship for the usable lifetime of the product (90 days for commercial use); and electrical components will be free of defects in material and workmanship for (1) years (90 days for commercial use); from the original date of purchase. Transportation charges on product submitted for repair or replacement under this warranty are the sole responsibility of the purchaser. This warranty only applies to the original purchaser and is not transferable.

Do Not Return The Unit To The Place Of Purchase

Contact KFI's Technical Service and KFI will troubleshoot any issue via phone or e-mail. If the problem is not corrected by this method, KFI will, at its option, authorize evaluation, repair or replacement of the defective part or component at a KFI Service Center. KFI will provide you with a case number for warranty service. Please keep it for future reference. Repairs or replacements without prior authorization, or at an unauthorized repair facility, will not be covered by this warranty.

Warranty Exclusions

This warranty does not cover the following repairs and equipment:

Normal Wear

Winches need periodic parts and service to perform well. This warranty does not cover repair when normal use has exhausted the life of a part or the equipment as a whole.

Installation, Use and Maintenance

This warranty will not apply to parts and/or labor if this winch is deemed to have been misused, neglected, involved in an accident, abused, loaded beyond the winch's limits, modified, installed improperly or wired incorrectly to any electrical component. Normal maintenance is not covered by this warranty.

Other Exclusions

- The winch cable or synthetic cable.
- Cosmetic defects such as paint, decals, etc.
- Accessory parts such as storage covers.
- Misuse, abuse, neglect, acts of God, terrorism and causes beyond the control of KFI.
- Problems caused by parts that are not original Kappers Fabricating Inc. parts.
- Cable Stacking and Water Submersion or Damage Caused by Water.

Warranty Procedure

1. Contact KFI Technical support to acquire a Return Authorization (RA) number.
2. KFI may request additional materials (such as original sales receipt, date of purchase, technical details, or photos of Product condition) prior to issuing an RA number.
3. At the discretion of KFI, Buyer shall mail, ship, or otherwise deliver to KFI the Warrantied Product, at the address noted below.

Limits of Implied Warranty and Consequential Damage

Kappers Fabricating Inc. disclaims any obligation to cover any loss of time, use of this product, freight, or any incidental or consequential claim by anyone from using this winch. THIS WARRANTY IS IN LIEU OF ALL OTHER WARRANTIES, EXPRESS OR IMPLIED, INCLUDING WARRANTIES OF MERCHANTABILITY OR FITNESS FOR A PARTICULAR PURPOSE

A unit provided as an exchange will be subject to the warranty of the original unit. The length of the warranty governing the exchanged unit will remain calculated by reference to the purchase date of the original unit.

This warranty gives you certain legal rights which may change from state to state. Your state may also have other rights you may be entitled to that are not listed within this warranty.

Contact Information

Address

KFI Products
Winch Customer Service
P.O. BOX 32
721 SATA DRIVE
SPRING VALLEY, MN 55975

Corporate

KAPPERS FABRICATING, INC.
P.O. BOX 32
1015 INDUSTRIAL DR.
SPRING VALLEY, MN 55975

Customer Service

Mon - Thr 8:00 AM - 5:00 PM (CST/CDT)
Fri - 7:00 AM - 1:00 PM (CST/CDT)
Toll Free: 1-877-346-2050 Opt 1
Fax No: 1-507-346-2010
E-mail: sales@kfiproducts.com

Technical Service

Mon - Thr 8:00 AM - 5:00 PM (CST/CDT)
Thr - 7:00 AM - 1:00 PM (CST/CDT)
Toll Free: 1-877-346-2050 Opt 2
E-mail: tech@kfiproducts.com

Website

https://www.kfiproducts.com

1-877-346-2050

KFI PRODUCTS
P.O. BOX 32
721 SATA DRIVE
SPRING VALLEY, MN 55975

WWW.KFIPRODUCTS.COM

CORPORATE OFFICE:

KAPPERS FABRICATING, INC.
P.O. BOX 32
1015 INDUSTRIAL DR.
SPRING VALLEY, MN 55975
USA

CE

MADE IN CHINA
©2025 KAPPERS FABRICATING, INC.

UTV WINCH

STEEL CABLE

MODEL #U45w-R2

4,500 LB. (2041 KG)

OPERATOR'S MANUAL

READ AND SAVE THIS MANUAL. This manual contains important safety precautions which should be read and understood before operating the product. Failure to do so could result in serious injury. This manual should remain with the product. Specifications, descriptions, and illustrations in this manual are as accurate as known at the time of publication, but are subject to change without notice.

Place serial label here for reference.

SERIAL NO. LABEL

Support:

1-877-346-2050

or visit **www.kfiproducts.com**

Made in China - REV 20250224

KFI Products - Kappers Fabricating, Inc., Spring Valley, MN USA

TABLE OF CONTENTS

Introduction **1**
Accessories 1
This Manual 1
Safety Definitions **1**
Important Safety Instructions **2**
Controls and Features **4**
Installation **5**
Mount the Winch 5
Winch Assembly - Generic Install 5
Mount the Contactor 6
Install UTV Dash Mounted Rocker Switch 6
Mount the Hand Remote Socket 6
Wiring the Winch 7
Winch Wiring Diagram 8
Motor End Terminal Rotation 8
Controller Wiring Diagram 9
Cable Hook Stopper Installation and Use 9
General Tips for Safe Operation 10
Self Recovery 10
Winching Techniques 11
Snow Plow Usage 12
Maintenance **12**
Motor 12
Lubrication 12
Cable Assembly Replacement 12
Specifications **13**
Performance: 13
Parts Diagram 14
Parts List 15
Troubleshooting **16**
Warranty **17**
Contact Information 18

INTRODUCTION

Congratulations on your purchase of a KFI winch. KFI researches and develops winches to strict specifications. With proper use and maintenance, this winch will bring years of satisfying service.

Accessories

Kappers Fabricating, Inc. manufactures, purchases, and sells accessories designed to help you get the most from your purchase. To find out more about our products, visit our web site at:

www.kfiproducts.com

This Manual

Every effort has been made to ensure the accuracy and completeness of information in this manual. We reserve the right to change, alter, and or improve the product and this document at any time without prior notice.

Record the model as well as date and place of purchase for future reference. Have this information available when ordering parts and when making technical or warranty inquiries.

KFI TECHNICAL SUPPORT TEAM
1-877-346-2050
MODEL NUMBER
U45w-R2
SERIAL NUMBER
DATE OF PURCHASE
PURCHASE LOCATION

SAFETY DEFINITIONS

The purpose of safety symbols is to attract your attention to possible dangers. The safety symbols, and their explanations, deserve your careful attentions and understanding. The safety warnings do not by themselves eliminate any danger. The instructions or warnings they give are not substitutes for proper accident prevention measures.

DANGER DANGER indicates a hazardous situation which, if not avoided, will result in death or serious injury.

WARNING WARNING indicates a hazardous situation which, if not avoided, could result in death or serious injury.

CAUTION CAUTION indicates a hazardous situation which, if not avoided, could result in minor or moderate injury.

NOTICE NOTICE indicates information considered important, but not hazard-related (e.g. messages relating to property damage or physical injury).

IMPORTANT SAFETY INSTRUCTIONS

WARNING Cancer and Reproductive Harm - www.P65Warnings.ca.gov

WARNING Read this manual thoroughly before operating the winch. Failure to follow instructions could result in serious injury or death.

WARNING Do not exceed the rated capacity.

DANGER Do not use this winch for lifting or moving people or animals.

DANGER Keep yourself and others a safe distance to the side of the cable when under tension.

DANGER Never step over a cable or near a cable under load.

WARNING The cable may break before the motor stalls. For heavy loads at or near rated capacity, use a pulley block/snatch block to reduce the load on the cable.

WARNING Do not move the vehicle to pull a load (towing) on the winch cable. This could result in cable breakage.

WARNING Pull only on area of the vehicle as specified by the vehicle manufacturer.

WARNING Do not use the winch to secure or hold a vehicle for a long period of time. Do not use the winch to secure a vehicle for transport.

WARNING Disconnect the remote control and battery leads when not in use for extended periods.

WARNING Avoid “shock loads” by using the control switch intermittently to take up slack in the cable. “Shock loads” can far exceed the rated capacity for the winch cable and drum.

Do not accelerate your vehicle while winching. Loss of traction can cause a shock load on the cable. Do not use cable as a pull strap.

WARNING Batteries contain acid and produce explosive gases. Keep sparks, flames and cigarettes away from batteries at all times. Wear safety glasses and protect the eyes at all times. Do not lean over the batteries during operation.

WARNING Do not use as a hoist. Do not use for overhead lifting.

WARNING When re-spooling the cable, ensure that the cable spools in the under-wind position with the cable entering the drum from the bottom, not the top.

To re-spool correctly, and while wearing gloves, keep a slight load on the cable while pushing the remote button to draw in the cable. Walk toward the winch not allowing the cable to slide through your hands. Do not let your hands get within 12 in. of the winch while re-spooling. Turn off the winch and repeat the procedure until a few feet of cable are left. Disconnect the remote control and finish spooling by rotating the drum by hand with the clutch disengaged. Keep hands clear of the fairlead and drum while the winch is under power.

CAUTION Use gloves to protect hands when handling the cable. Never let the cable slide through your hands.

CAUTION Do not wrap the cable around any object and hook it back onto itself.

CAUTION Apply blocks to the wheels of the vehicle when on an incline.

CAUTION Duration of winching pulls should be kept as short as possible.

If the motor becomes uncomfortably hot to the touch, stop winching immediately and let it cool down for a few minutes. Do not pull for more than one minute at or near the rated load.

CAUTION If the motor stalls, do not maintain power to the winch.

Electric winches are designed and made for intermittent use and should not be used in constant duty applications.

CAUTION Never release the free spool clutch when there is a load on the winch.

CAUTION Use the Hand-Saver strap when handling the winch hook for spooling or unspooling the cable.

CONTROLS AND FEATURES

Read this operator's manual before operating your winch. Familiarize yourself with the location and function of the control features. Save this manual for future reference.

Winch

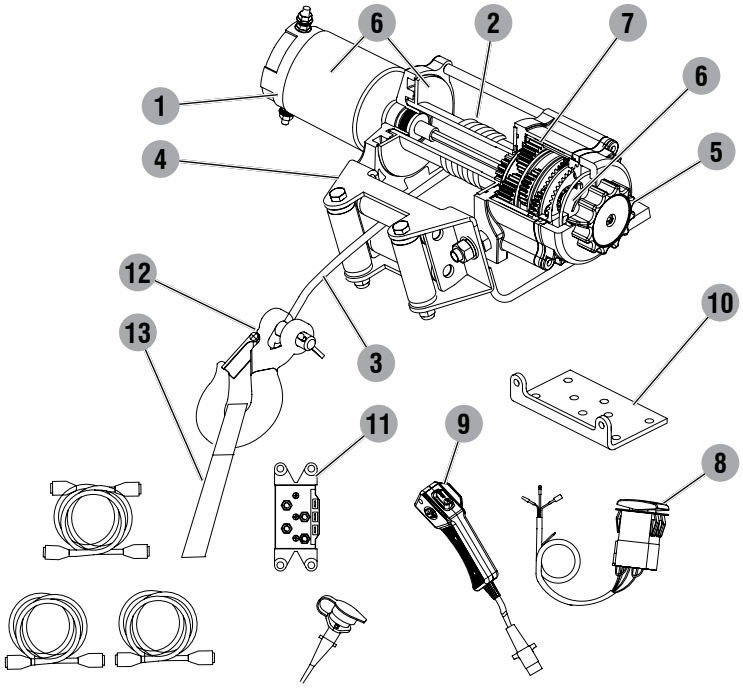

1. **Motor** – 1.70 HP 12V DC motor provides power to the planetary gear mechanism.
2. **Winch Drum** – The winch drum is the cylinder on which the cable is stored. It can feed or wind the cable depending on the switch assembly.
3. **Steel Cable** – 15/64 in. x 52 ft. Galvanized aircraft cable designed specifically for load capacity of 4,500 lbs. (50 usable feet with five wraps on the drum). The cable feeds onto the drum in the "under wind" position through the roller fairlead (4) and is looped at the end to accept the clevis hook pin (12).
4. **Roller Fairlead** – When using the winch at an angle the roller fairlead acts to guide the steel cable onto the drum and minimize damage to the cable from abrasion on the winch mount or bumper.
5. **Free Spooling Clutch** – The clutch allows the operator to manually disengage ("Release") the spooling drum from the gear train. Engaging the clutch ("Engage") locks the winch into the gear system.
6. **Braking System** – Braking action is automatically applied to the winch drum when the winch motor is stopped or there is a load on the cable.
7. **Planetary Gear System** – The reduction gears convert the winch motor power into extreme pulling forces. This system allows high torque while maintaining compact size and light weight.
8. **UTV Dash Mounted Rocker Switch** – Premium look & quality dash mounted switch for easy access.
9. **Hand Held Remote** – Hand held switch with a remote socket for powering the cable in or out of your winch drum.

10. **Fairlead Mount** – Adapter to mount the winch and fairlead for utility applications.

11. **Contactor** – Power from the vehicle battery flows through the weather sealed solenoid switch before being directed to the winch motor.

12. **Clevis Hook** – Provides a means for connecting the looped ends of cables to an anchor.

13. **Hand Saver Strap** – Used to assist cable feed.

INSTALLATION

This KFI 4,500 lb winch is designed with a bolt pattern that is standard for this class of winch. Many winch mounting kits are available that utilize this bolt pattern for the most popular ATVs and UTVs. You can find most of the ATV/UTV winch mounts on our website (www.kfiproducts.com).

Mount the Winch

WARNING Before starting to install this winch, disconnect the vehicle ground and positive leads from the battery.

1. Install the winch and fairlead with the supplied hardware per the instructions provided with the model specific winch mounting kit or prepare a flat, secure mounting location for the winch.

CAUTION Mounting bolts must be SAE Grade 5 or better and torqued to 17 ft. lbs.

NOTICE This kit includes mounting bolts with different lengths for fastening the winch (M8 x 20, 25, and 30mm long). Use the length that best fits your mounting application. Refer to vehicle specific mount instructions for more information.

CAUTION If you choose not to use a model specific mounting kit, you will need to drill holes in the structural support of the vehicle. Be certain that your structural support is sufficient for the pulling forces of this winch.

2. Attach the winch using supplied M8 x 25mm or 30mm bolts and washers thru the fairlead bracket or model specific winch mount and into the winch.

3. Disengage the clutch by rotating the clutch cap to the RELEASE position. Release the synthetic cable and pull through the roller fairlead.

4. Attach the clevis hook to the cable and the hand saver strap to the clevis hook.

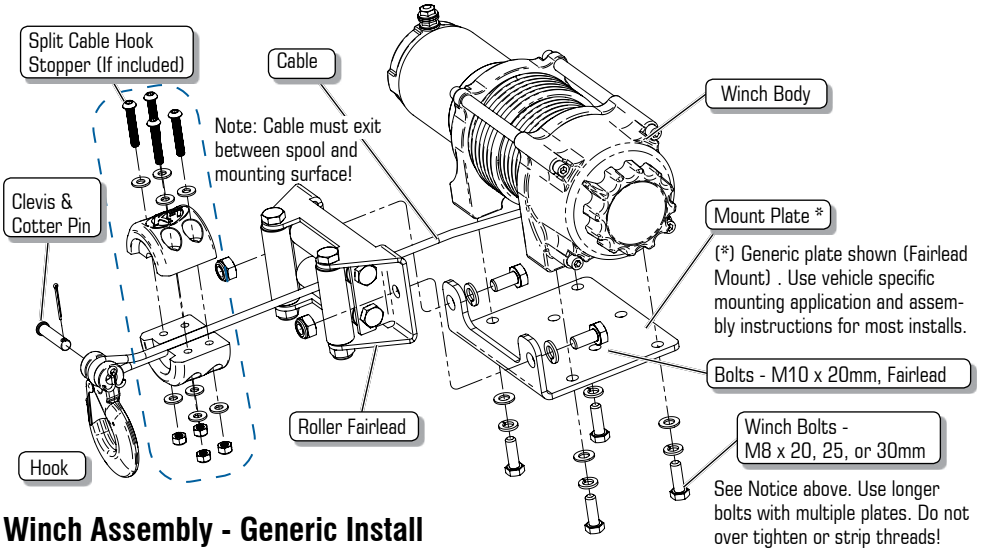

Winch Assembly - Generic Install

Mount the Contactor

5. Find a location for the contactor. If the model specific mounting kit does not indicate a recommended contactor location, then it is recommended that the contactor be mounted close to the battery in a clean dry location. Be certain the location you choose allows for sufficient clearance form all metal components. Drill mounting holes if required. Once a location is found, do not install until all wiring is completed.

Install UTV Dash Mounted Rocker Switch

6. Most UTV's & SxS's have a predefined switch location that is scored or marked for mounting and requires finish cutting with a knife.

7. Use the cut-out dimensions shown below to cut the switch location pattern if your dash doesn't have a predefined knockout or area.

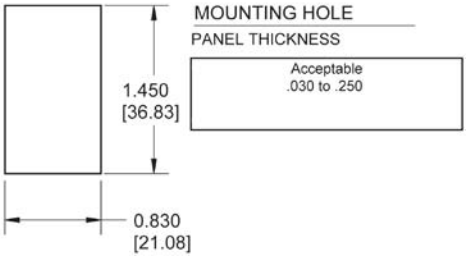

8. Once your switch is mounted you can route wires back to the contactor location.

9. Splice the end of the red wire to an ignition controlled (keyed) power source using the supplied wire splice. You may need to use a test light or multimeter to locate a suitable wire. The wire should only have power when the key is in the ON position.

Mount the Hand Remote Socket (optional)

10. Determine a mounting location for the Hand Remote

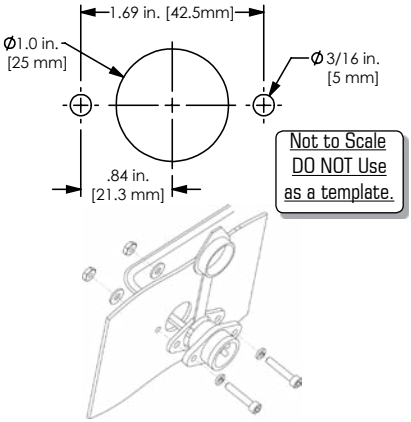

socket. Be certain the area behind the selection location is clear.

11. Drill three holes as shown in the following figure and install using supplied hardware. You can also use the rubber cap attached to the remote socket as a template.

12. Once your remote socket is mounted, you may route wires back to the contactor location.

13. Splice the end of the red wire to an ignition controlled (keyed) power source using the supplied wire splice. You may need to use a test light or multimeter to locate a suitable wire. The wire should only have power when the key is in the ON position.

14. Secure the wires with supplied cable ties.

Wiring the Winch

CAUTION Never route electrical wires across any sharp edges, through or near moving parts, or near parts that become hot.

15. Connect the yellow and blue wires to the motor terminals on the winch. Torque the nuts on the motor to 5.7 N-m (50 in lbs) Route the opposite ends to the contactor location. (See diagram on page 8).
16. Connect the yellow and blue wires to the contactor block (yellow to yellow, blue to blue). DO NOT tighten nuts. (See diagram page 8).
17. Connect the red and black wires to your contactor block (red to red, black to black). DO NOT tighten nuts. Route the opposite ends to the battery location (See diagram page 8).
18. Connect the mini rocker switch to the contactor block (black to black, green to green). (See diagram on page 9).
19. Once all wiring is connected to the contactor, finish mounting it to the contactor location using supplied M6 hardware (See diagram page 8).

WARNING Failure to follow specific wiring instructions may result in damage to your wiring system or equipment.

NOTICE Depending on the location of the contactor, you may need to use an alternate winch wiring configuration. Please see the "Alternate Winch Wiring Diagram" available on: www.kfiproducts.com

20. Torque the contactor terminal nuts to 4.5 N-m (40 in lbs) Do NOT over tighten.
21. Place all terminal boots over terminals and secure all cables with zip ties or electrical tape.

NOTICE If you are installing the hand remote along with the mini rocker switch, you will need to connect the remote socket to the contactor and then the mini rocker switch to the remote socket (see diagram on page 9).

22. Connect the battery leads from the contactor to the vehicle's battery (black to black, and red to red, see diagram on page 8).
23. Check for proper drum rotation. Turn the clutch cap to the RELEASE position. Pull out some cable from the drum and then turn the clutch cap to the ENGAGE position to engage the gears. Make sure your vehicle is running and press the cable out button on the switch. If the spool is turning and releasing more cable, then your connections are accurate. If the spool is turning and collecting more cable, then reverse the leads on the motor. Repeat and check rotation.

CAUTION Battery cables should not be drawn taut. Leave some slack for cable movement.

NOTICE Always hold the bottom nut with a wrench while tightening motor wire terminals. Do not allow the bottom nut to spin, else you may damage the end cap.

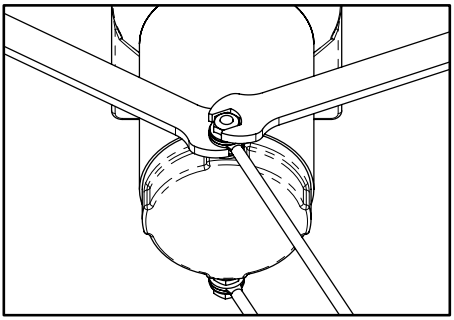

Proper Terminal Tightening

Winch Wiring Diagram

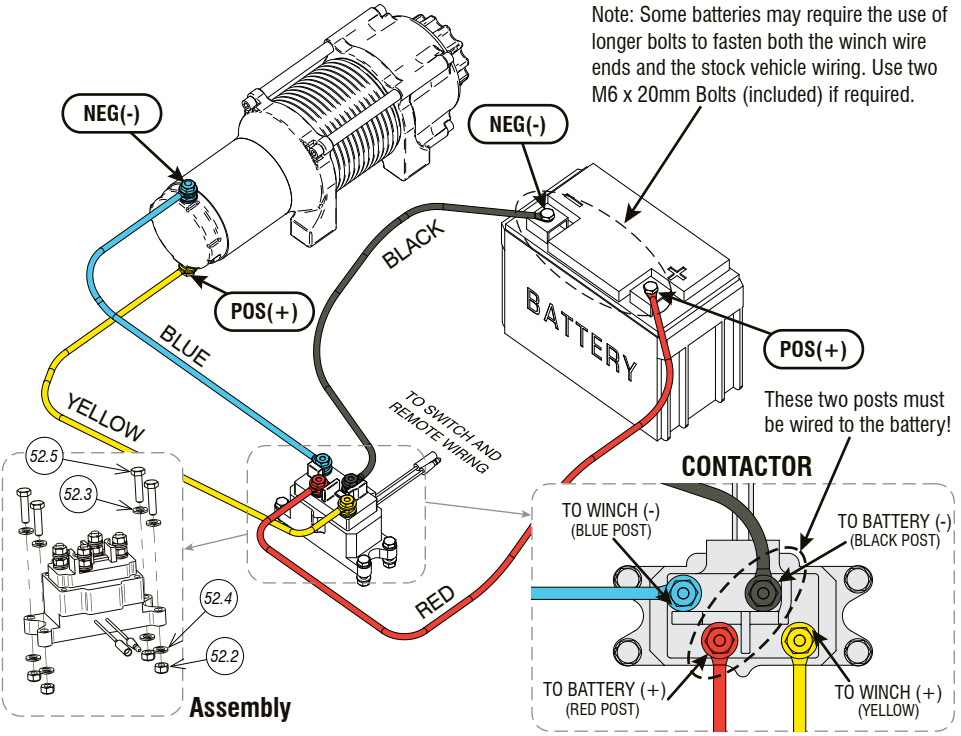

Motor End Terminal Rotation

With some applications, the motor terminals may need to be rotated to avoid interference with other components. If rotation is required please give us a call at 1-877-346-2050 for instructions or visit our website at www.kfiproducts.com and look in the support section.

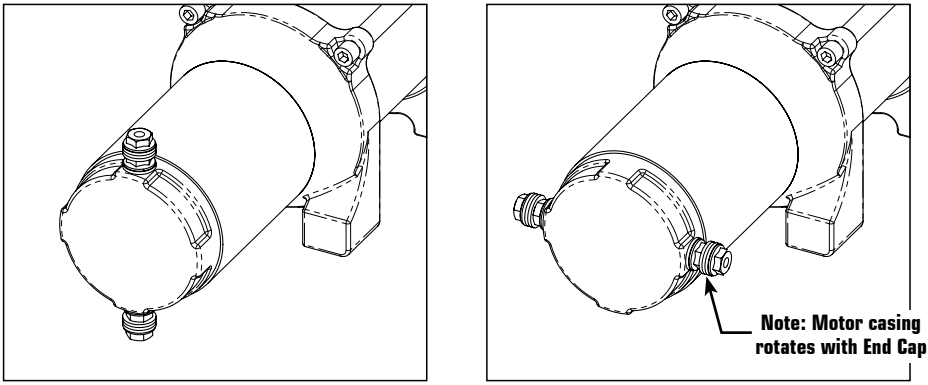

LEADS AT DEFAULT POSITION → LEADS ROTATED 90°

Controller Wiring Diagram

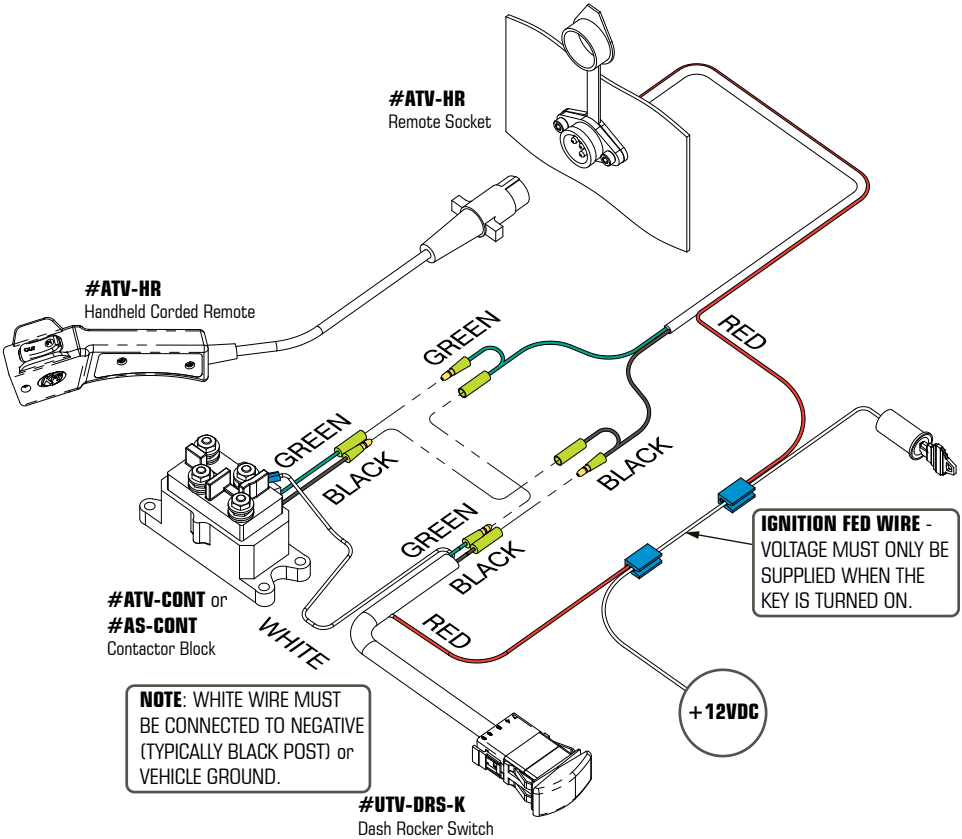

Cable Hook Stopper Installation and Use (Optional Accessory, Not Included)

1. Release winch and pull out approximately 2 feet of cable.
2. Assemble cable hook stopper as shown in diagram with the flat portion of the two halves resting against your fairlead. Tighten fasteners.
3. To stow hook, engage clutch and retract cable onto winch spool until hook is snug against the hook stopper and fairlead.
4. Position cable hook stopper at approx. 3/4 of the total line distance towards the hook while using your winch to help reduce whip back in the event of cable breakage.

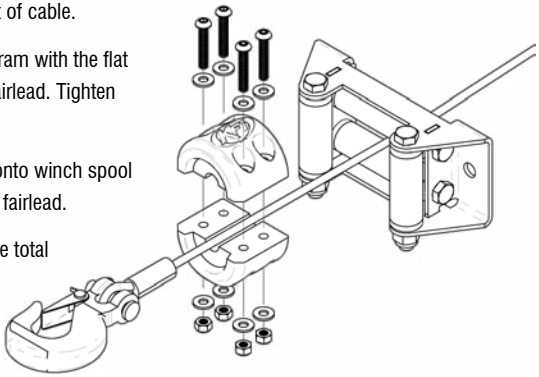

General Tips for Safe Operation

Your U45w-R2 winch is rated at 4,500 lbs. capacity in first layer (max) when spooling the first cable layer on the drum. Overloads can damage the winch, motor and/or cable.

The vehicle engine should be kept running during operation of the winch to minimize battery drain and maximize power and speed of the winch. If the winch is used for a considerable time with the engine off the battery may be drained and too weak to restart the engine.

Get to know your winch before you actually need to use it. We recommend that you set up a few test runs to familiarize yourself with rigging techniques, the sounds your winch makes under various loads, the way the cable spools on the drum, etc.

Inspect the cable and equipment before each use. A frayed or damaged cable should be replaced immediately. Use only manufacturer's identical replacement cable with the exact specifications.

Inspect the winch installation and bolts to ensure that all bolts are tight before each operation.

Store the remote control inside your vehicle in a place that it will not be damaged.

Any winch that appears to be damaged in any way, is found to be worn, or operates abnormally MUST BE REMOVED FROM SERVICE UNTIL REPAIRED. It is recommended that the necessary repairs be made by a manufacturer's authorized repair facility.

Pull only on areas of the vehicle as specified by the vehicle manufacturer.

Only attachments and/or adapters supplied by the manufacturer are to be used.

Self Recovery

Locate a suitable anchor such as a strong tree trunk or boulder. Always use a sling as an anchor point.

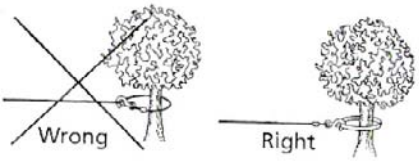

Your winch is equipped with a roller fairlead to help guide the cable and to reduce binding on short side pulls.

Do not winch from an acute angle as the cable will pile up on one side of the drum causing damage to cable and the winch.

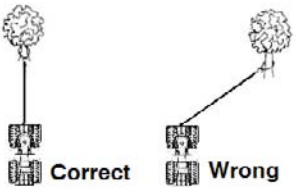

Short pulls from an angle can be used to straighten the vehicle. Long pulls should be done with the cable straight out from the winch/vehicle.

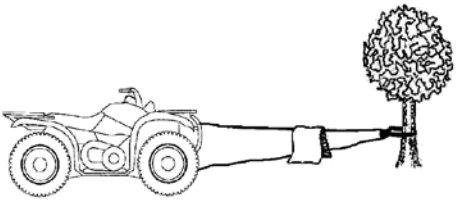

When pulling a heavy load, place a cable hook stopper, blanket or jacket over the cable five or six feet from the hook.

In the event of a cable snap it will dampen the snap back. For additional protection open the hood of the vehicle.

Winching Techniques

1. Take time to assess your situation and plan your pull.
2. Put on gloves to protect your hands.
3. Release the clutch and free-spool the winch; it's faster than using the switch and saves battery power.
4. Attach the hook strap to the clevis hook.
5. Pull out the cable to your desired anchor point using the hook strap.
6. Secure the clevis hook to the anchor point: Sling, chain or snatch block. Do not attach the hook back onto the cable.
7. Engage the clutch.
8. Start your engine to ensure power is being replenished to the battery.
9. Power in the cable guiding the cable under tension to draw up the slack in the cable. Once the cable is under tension, stand clear. Never step over the cable.
10. Double check your anchors and make sure all connections are secure.
11. Inspect the cable. Make sure there are at least 5 wraps of cable around the winch drum.
12. Place a Cable Hook Stopper over the cable approximately 5 to 6 feet from the hook.
13. Clear the area. Make sure all spectators stand clear and that no one is directly in front or behind the vehicle or anchor point.
14. Begin winching. Be sure that the cable is winding evenly and tightly around the drum. The vehicle that is being winched can be slowly driven to add assistance to the winching process. Avoid shock loads; keep the cable under tension.
15. The vehicle to be winched should be placed in neutral and the parking brake released. Only release the loads to the winch. This can damage the winch, cable and vehicle.
16. The winch is meant for intermittent use. Under full load with a single line rig do not power in for more than a minute without letting the motor cool down for a few minutes and then resume the winching operation.
17. The winching operation is complete once the vehicle is on stable ground and is able to drive under its own power.
18. Secure the vehicle. Be sure to set the brakes and place the vehicle in park.
19. Release the tension on the cable. The winch is not meant to hold the vehicle for long periods of time.
20. Disconnect the cable from the anchor.
21. Rewind the cable. Make sure that any cable already on the drum has spooled tightly and neatly. If not, draw out the cable and re-spool from the point where the cable is tight.
22. Keep your hands clear of the winch drum and fairlead as the cable is being drawn in.
23. Secure the hook and hook strap.
24. Disconnect the remote control and store in a clean, dry place.
25. Clean and inspect connections and mounting hardware for next winching operation.
26. Never use the winch as a tie down.
27. Use brake pedal when under full tension.

Snow Plow Usage

Winches are commonly used to lift a Snow Plow System, but precautions and correct usage are required to prevent costly damage.

NOTICE Follow these precautions before using your Winch to lift a Plow. Failure to do so may result in damage to your winch or vehicle frame.

1. Stop the plow before full lift height - failure to do so will cause the winch to pull against itself (i.e. “bottom out”) and will cause damage to the winch components, your plow frame and your vehicle frame.

NOTICE Winch damage such as stripped gears, broken housings and bent or damaged parts caused by exceeding your plow’s lift height are not covered under warranty.

2. Do not continue to hold the Spool In button to power the winch while reversing your vehicle or other instances where the operator may become distracted while plowing.

MAINTENANCE

The owner/operator is responsible for all periodic maintenance.

Complete all scheduled maintenance in a timely manner. Correct any issue before operating the winch.

WARNING Never operate a damaged or defective winch.

WARNING Improper maintenance will void your warranty.

NOTICE For service or parts assistance, contact our help line at 1-877-346-2050.

Motor

Periodically when not used very often, or after wet / damp conditions. Be sure to run the motor in free spool until the motor is warm. This helps dry out any moisture and condensation trapped inside the housing.

Lubrication

All moving parts within the Electric Winch have been Lubricated using high temperature lithium grease at the factory. No internal lubrication is required under normal conditions.

If the winch is subjected to extreme conditions lubrication may be required using a high temperature lithium grease. Retract Cable Assembly onto drum being careful not to allow kinking or over heating of the winch.

Cable Assembly Replacement

It is recommended that any modifications be performed by a manufacturer’s authorized repair facility, and that only manufacturer-supplied parts be used

1. Rotate the clutch cap to the “Release” position.
2. Extend Cable Assembly to its full length. Note how the existing cable is connected to the inside of the drum.
3. Remove old Cable Assembly and attach new one.
4. Rotate the clutch cap to the “Engage” position.

NOTICE Inspect cable before and after each use. If cable becomes frayed it must be replaced.

SPECIFICATIONS

Performance:

Rated Pull ..... 4,500 lb (2041 kg)

Gear Reduction Ratio 166:1

Motor.....Permanent Magnet, 1.70 HP (DC 12V)

Drum Size..... 2.00 x 4.92 in. (50.8 x 125 mm)

Cable Dimensions ..... 15/64 in. x 52 ft. (6.0mm x 16m)

Gross Weight ..... 36.4 lb. (16.5 kg)

Mounting Bolt Pattern..... 6.6 in. x 3.00 in. (16.8 cm x 7.6 cm)

Overall Dimensions ..... 16.3 in. (L) x 4.55 in. (W) x 4.82 in. (H) (41.5 cm x 11.6 cm x 12.3 cm)

Line Speed and Motor Current (First Layer)						
Line Pull	LB	0	1000	2000	3000	4500
	KG	0	454	907	1361	2041
Line Speed (12 VDC)	FPM	12.8	9.8	8.5	6.9	4.6
	MPM	3.9	3.0	2.6	2.1	1.4
Max Current	A	28	80	130	180	280
Run Time *	Minutes	1	1	1	1	1
Cooling Time **	Minutes	5	5	5	5	5

** If the motor becomes uncomfortably hot to the touch, stop winching immediately and let it cool down for 5 minutes. Do not pull for more than one minute at or near the rated load.*

*** Electric winches are designed and made for intermittent use and should not be used in constant duty applications.*

Line Pull and Cable Capacity Per Layer					
Layers of Cable on Drum		1	2	3	4
Rated Line Pull	LB	4500	3715	3163	2754
	KG	2041	1685	1435	1249
Cable Capacity	FT	12.2	26.2	41.9	52.0
	M	3.7	8.0	12.8	16.0

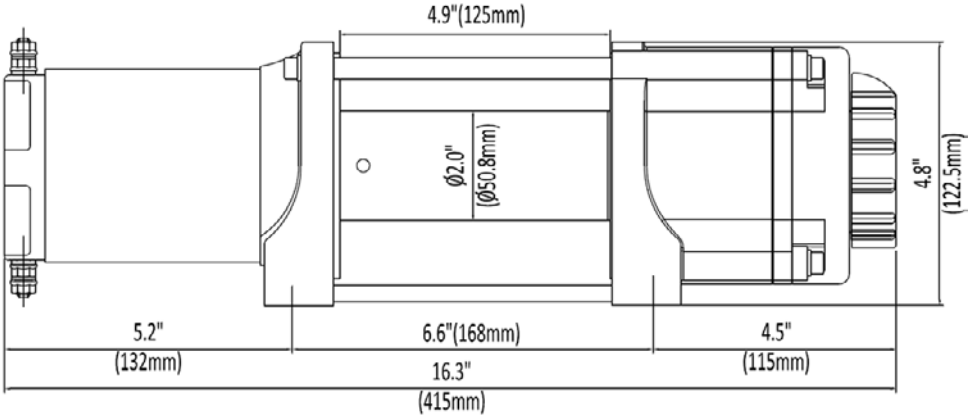

Parts Diagram

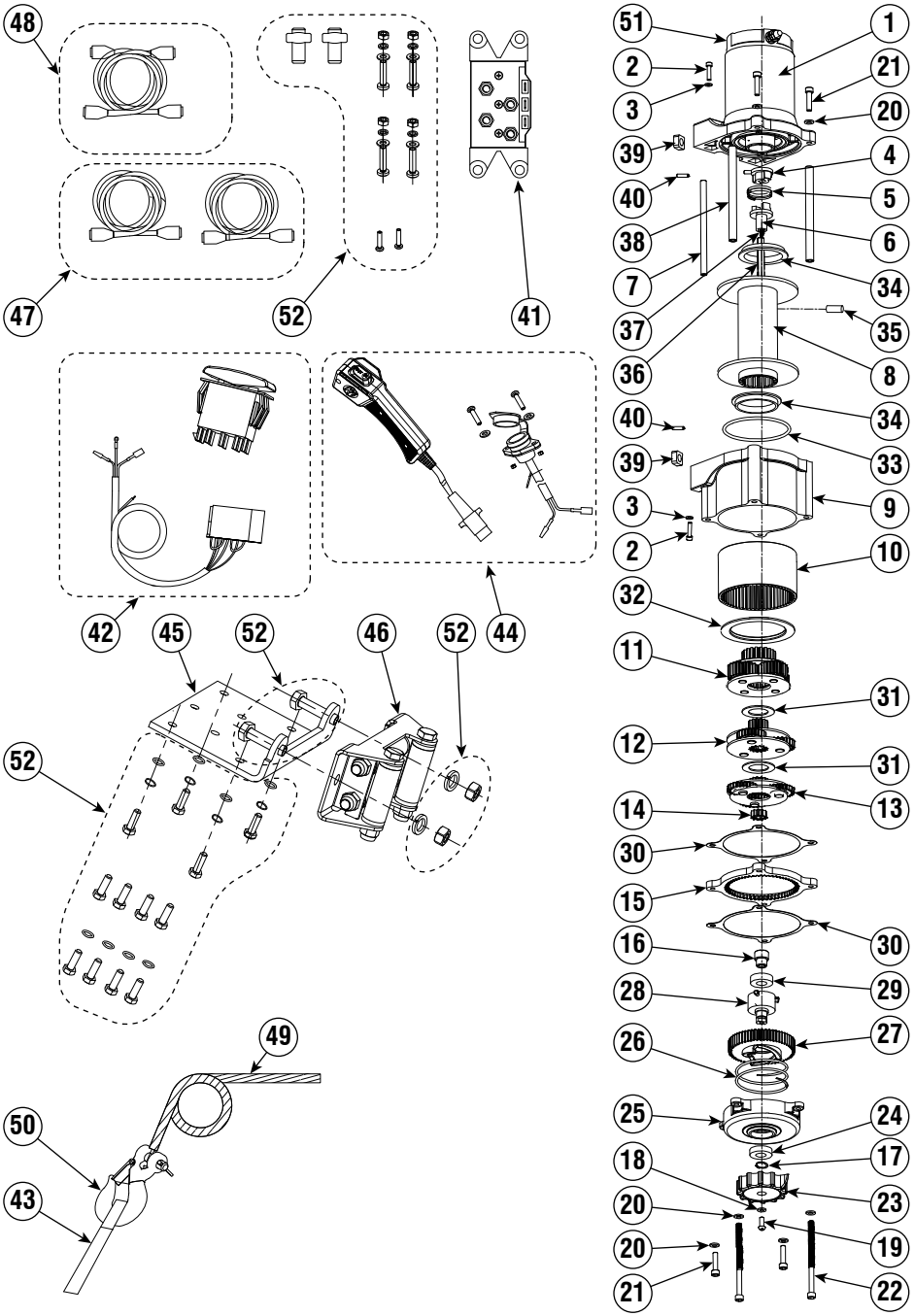

Parts List

#	Part Number	Description	Qty
1	MOTOR-45-BL	Motor Assembly	1
2	HW-0019	Screw M4 x 25 Socket	2
3	HW-0020	Lock Washer Ø4	2
4	WP-0026	Coupling, I	1
5	WP-0027	Spring, Coupling	1
6	WP-0028	Coupling, II	1
7	WP-0083	Tie Bar Ø8 x 130	1
8	WP-0060	Drum, Steel, Wide	1
9	WP-0031	Gear Housing	1
10	WP-0032	Gear Ring	1
11	WP-0033	Gear Carrier Asm, Output	1
12	WP-0034	Gear Carrier Asm, Inter	1
13	WP-0035	Gear Carrier Asm, Input	1
14	WP-0036	Gear, Input, Sun	1
15	WP-0037	Gear, Fixed	1
16	WP-0038	Bushing, Clutch	1
17	HW-0004	Circlip Ø15	1
18	HW-0006	Washer Ø6 Lock	1
19	HW-0007	Screw M6 x 16 Phillips	1
20	HW-0003	Washer Ø6	6
21	HW-0021	Screw M6 x 25 Socket	4
22	HW-0022	Screw M6 x 100 Socket	2
23	WP-0001	Clutch Cap	1
24	WP-0015	Bearing 16002 Sealed	1
25	WP-0039	Clutch Cover	1
26	WP-0013	Spring, Clutch	1
27	WP-0040	Cam, Clutch Gear	1
28	WP-0016	Bushing, Axis Support	1
29	WP-0017	Bearing 6002 Sealed	1
30	WP-0041	Seal	2
31	WP-0042	Washer, Friction	2
32	WP-0043	Retaining Ring	1
33	WP-0044	O-Ring Seal	1
34	WP-0045	Bushing, Drum	2
35	WP-0008	Set Screw M5 x 8	1
36	WP-0072	Shaft, Hexagon, H8 x 194	1
37	WP-0047	Spring, Shaft	1
38	WP-0081	Tie Bar Ø10 x 130	2
39	WP-0049	Square Nut	4
40	WP-0050	Pin, Spring, Ø3 x 14	4
41	ATV-CONT	Contactor	1
42	UTV-DRS-K	UTV Dash Rocker Switch Kit	1

#	Part Number	Description	Qty
43	WP-0030-BLU	Hand Saver Strap, Blue	1
44	ATV-HR	Hand Remote Asm	1
45	100695	Bracket, Fairlead, Wide	1
46	UTV-RF	Roller Fairlead, Wide	1
47	SE-WIRES-UTV-WIN	Wiring, Winch, UTV	1
47.1	WP-0092	Terminal Protector	4
48	SE-WIRES-UTV-BAT	Wiring, Battery, UTV	1
48.1	WP-0092	Terminal Protector	4
49	UTV-CBL-4KW	Cable, Steel, 15/64" x 52'	1
50	SE-HOOK	Clevis Hook, 1/4"	1
51	SE-U-CAPKIT	Motor End Cap Assembly	1
52	HK-500	Hardware Kit, Black	1
52.01	HW-0001	Wire Tap	2
52.02	HW-0014-B	Nut M6 Nylock	4
52.03	HW-0006-B	Washer Ø6 Lock	4
52.04	HW-0003-B	Washer Ø6	4
52.05	HW-0013-B	Bolt M6 x 25	4
52.06	HW-0015-B	Bolt M6 x 20	2
52.07	HW-0010-B	Bolt M10 x 20	2
52.08	HW-0011-B	Washer Ø10 Lock	2
52.09	HW-0012-B	Nut M10 Nylock	2
52.10	HW-0016-B	Washer Ø8	8
52.11	HW-0009-B	Washer Ø8 Lock	4
52.12	HW-0008-B	Bolt M8 x 25	4
52.13	HW-0018-B	Bolt M8 x 20	4
52.14	HW-0017-B	Bolt M8 x 30	4

TROUBLESHOOTING

Problem	Cause	Solution
Motor does not run, Contactor makes a click sound.	Incorrect Wiring	Check Winch Wiring Diagram, make sure all wires are correctly connected.
	Incorrect Wiring	Hand Remote / Mini Rocker Switch wires must be connected green to green and black to black.
	Loose battery cable connections	Hand tighten nuts on all cable connections.
	Motor Issue	Contact KFI Technical Support
	Water has entered motor	Allow to drain and dry. Run in short burst with load until completely dry.
	Brake Spring installed backwards	Contact KFI Technical Support.
Motor does not run, NO click sound from Contactor.	Incorrect Wiring	Check Winch Wiring Diagram, make sure all wires are correctly connected.
	Switch Ignition Wire	Check connection to an ignition fed source. Must supply 12V with the key on and vehicle running.
	Contactor malfunctioning	Contact KFI Technical Support.
	Switch malfunctioning	Contact KFI Technical Support.
Motor runs, Spool turns in one direction only.	Incorrect Wiring	Check wiring diagram, verify switch wires (black/ green) are properly connected and making good contact.
	Defective or stuck Contactor	Tap contactor to loosen plungers.
	Defective Switch assembly	Replace Switch assembly.
	Contactor malfunctioning	Contact KFI Technical Support.
Motor runs, Spool does NOT turn.	Clutch not engaged	Rotate Clutch Cap to Engage.
	Broken Coupler / stripped Shaft	Replace Coupler or Shaft
Spool turns, but no movement from Cable	Cable not attached to Spool	Contact KFI Technical Support.
Motor runs slowly or without normal power.	Insufficient current or voltage.	The battery is weak, recharge. Run winch with vehicle motor running (battery should have a strong charge).
	Loose or corroded battery cable connections	Clean, tighten, or replace.
	Worn Brushes	Replace with End-Cap Kit (#SE-U-CAPKIT) Contact KFI Technical Support.
Motor overheating	Winch running time too long	Allow winch to cool down periodically.

For further support, contact:

KFI Tech Support

Mon-Thr 8:00 AM - 5:00 PM (CST/CDT)
Fri 7:00 AM - 1:00PM (CST/CDT)
Toll Free: 1-877-346-2050
tech@kfiproducts.com

KFI Products Website Support:

Common installation, maintenance, and troubleshooting guides are available on our website.

https://www.kfiproducts.com/support.html

WARRANTY

KAPPERS FABRICATING, INC.
1 YEAR LIMITED LIFETIME WARRANTY

Warranty Qualifications

Kappers Fabricating Inc. (KFI) will register this warranty upon receipt of your Warranty Registration Card and a copy of your sales receipt from one of KFI's resale locations as proof of purchase. Please submit your warranty registration and your proof of purchase within Fifteen (15) days of the date of purchase.

Repair/Replacement Warranty

KFI warrants to the original purchaser that mechanical components will be free of defects in material and workmanship for the usable lifetime of the product (90 days for commercial use); and electrical components will be free of defects in material and workmanship for (1) years (90 days for commercial use); from the original date of purchase. Transportation charges on product submitted for repair or replacement under this warranty are the sole responsibility of the purchaser. This warranty only applies to the original purchaser and is not transferable.

Do Not Return The Unit To The Place Of Purchase

Contact KFI's Technical Service and KFI will troubleshoot any issue via phone or e-mail. If the problem is not corrected by this method, KFI will, at its option, authorize evaluation, repair or replacement of the defective part or component at a KFI Service Center. KFI will provide you with a case number for warranty service. Please keep it for future reference. Repairs or replacements without prior authorization, or at an unauthorized repair facility, will not be covered by this warranty.

Warranty Exclusions

This warranty does not cover the following repairs and equipment:

Normal Wear

Winches need periodic parts and service to perform well. This warranty does not cover repair when normal use has exhausted the life of a part or the equipment as a whole.

Installation, Use and Maintenance

This warranty will not apply to parts and/or labor if this winch is deemed to have been misused, neglected, involved in an accident, abused, loaded beyond the winch's limits, modified, installed improperly or wired incorrectly to any electrical component. Normal maintenance is not covered by this warranty.

Other Exclusions

- The winch cable or synthetic cable.
- Cosmetic defects such as paint, decals, etc.
- Accessory parts such as storage covers.
- Misuse, abuse, neglect, acts of God, terrorism and causes beyond the control of KFI.
- Problems caused by parts that are not original Kappers Fabricating Inc. parts.
- Cable Stacking and Water Submersion or Damage Caused by Water.

Warranty Procedure

1. Contact KFI Technical support to acquire a Return Authorization (RA) number.
2. KFI may request additional materials (such as original sales receipt, date of purchase, technical details, or photos of Product condition) prior to issuing an RA number.
3. At the discretion of KFI, Buyer shall mail, ship, or otherwise deliver to KFI the Warrantied Product, at the address noted below.

Limits of Implied Warranty and Consequential Damage

Kappers Fabricating Inc. disclaims any obligation to cover any loss of time, use of this product, freight, or any incidental or consequential claim by anyone from using this winch. THIS WARRANTY IS IN LIEU OF ALL OTHER WARRANTIES, EXPRESS OR IMPLIED, INCLUDING WARRANTIES OF MERCHANTABILITY OR FITNESS FOR A PARTICULAR PURPOSE

A unit provided as an exchange will be subject to the warranty of the original unit. The length of the warranty governing the exchanged unit will remain calculated by reference to the purchase date of the original unit.

This warranty gives you certain legal rights which may change from state to state. Your state may also have other rights you may be entitled to that are not listed within this warranty.

Contact Information

Address

KFI Products
Winch Customer Service
P.O. BOX 32
721 SATA DRIVE
SPRING VALLEY, MN 55975

Corporate

KAPPERS FABRICATING, INC.
P.O. BOX 32
1015 INDUSTRIAL DR.
SPRING VALLEY, MN 55975

Customer Service

Mon - Thr 8:00 AM - 5:00 PM (CST/CDT)
Fri - 7:00 AM - 1:00 PM (CST/CDT)
Toll Free: 1-877-346-2050 Opt 1
Fax No: 1-507-346-2010
E-mail: sales@kfiproducts.com

Technical Service

Mon - Thr 8:00 AM - 5:00 PM (CST/CDT)
Thr - 7:00 AM - 1:00 PM (CST/CDT)
Toll Free: 1-877-346-2050 Opt 2
E-mail: tech@kfiproducts.com

Website

https://www.kfiproducts.com

1-877-346-2050

KFI PRODUCTS
P.O. BOX 32
721 SATA DRIVE
SPRING VALLEY, MN 55975

WWW.KFIPRODUCTS.COM

CORPORATE OFFICE:

KAPPERS FABRICATING, INC.
P.O. BOX 32
1015 INDUSTRIAL DR.
SPRING VALLEY, MN 55975
USA

CE

MADE IN CHINA
©2025 KAPPERS FABRICATING, INC.

HYDRAULIC PLOW ACTUATOR BRACKETS

Plow Accessory PART #106305 Rev. C

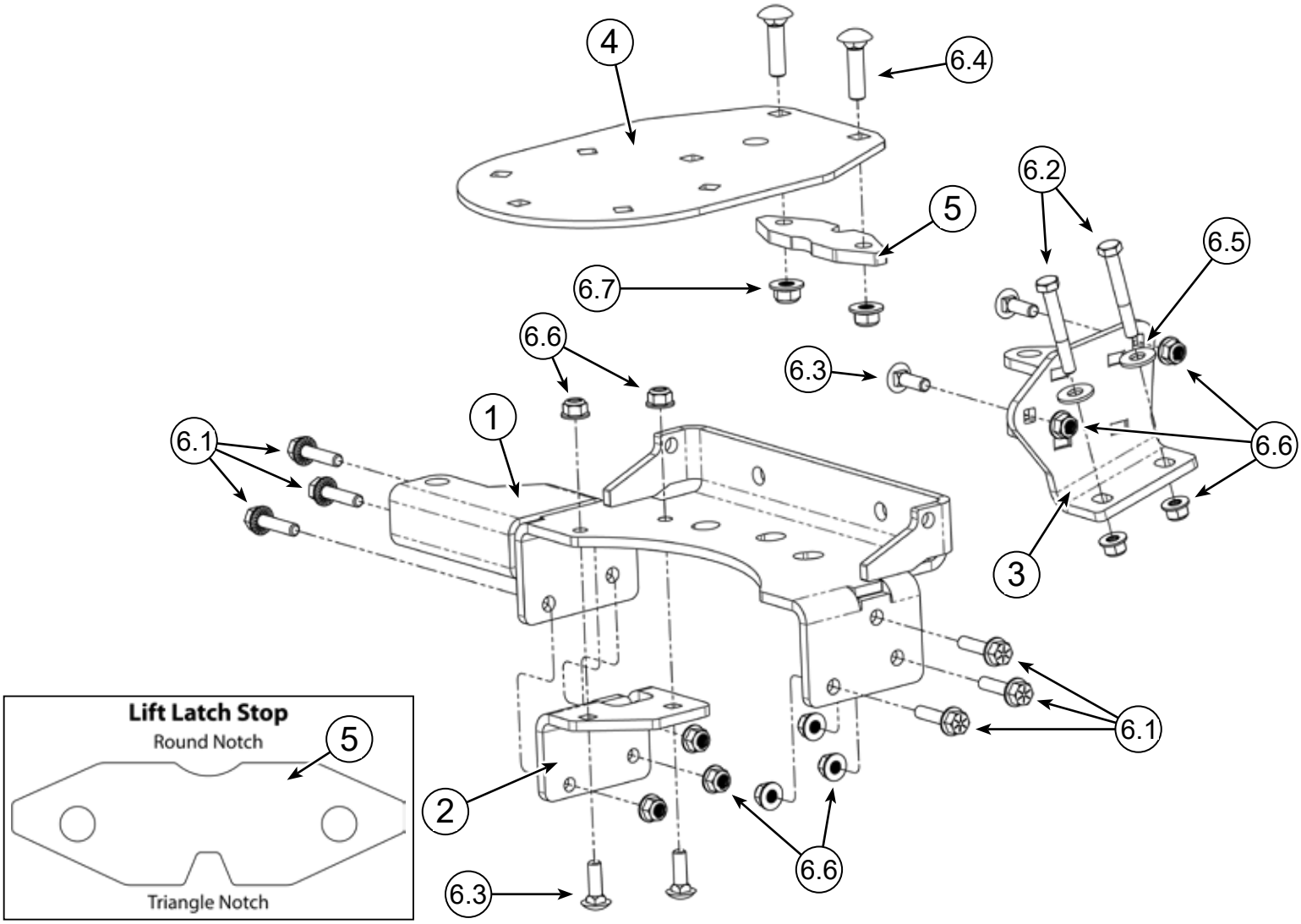

Item #	Qty.	Description
1	1	Cradle Bracket
2	1	Backer Plate
3	1	Rear Tube Bracket
4	1	Flat Cradle Keeper
5	1	Lift Latch Stop
6	1	Hardware Kit (HK-404)

Item #	Qty.	Description
6.1	6	5/16”-18 X 1.25 Hex Flange Bolt GR8
6.2	2	5/16”-18 X 2.25 Hex Bolts GR5
6.3	4	5/16”-18 X 1.00 Carriage Bolts GR5
6.4	2	3/8”-16 X 1.5” Carriage Bolt GR5
6.5	2	5/16” Flat Washer
6.6	12	5/16”-18 Hex Flange Lock Nut
6.7	2	3/8”-16 Hex Nut Flange Nylock GR5

©2024 Copyright Kappers Fabricating, Inc. All rights reserved

BRACKET INSTALLATION INSTRUCTIONS

Note: Make sure all hardware needed to complete this mount is in the package. Thoroughly read through and understand the instructions before installing.

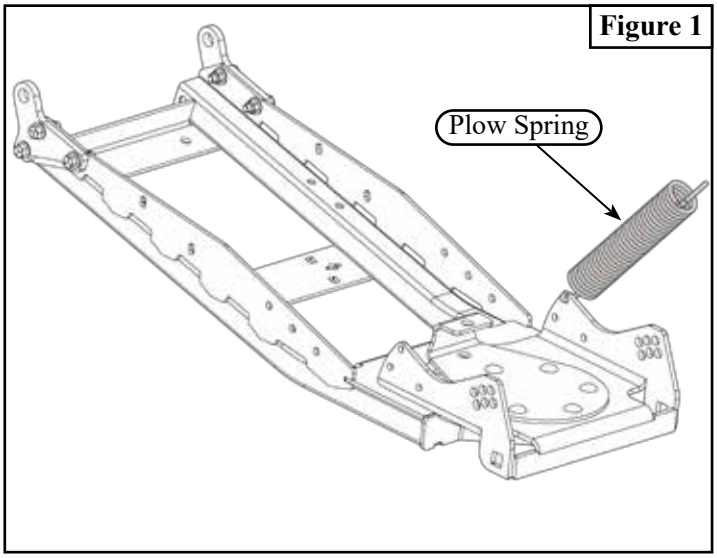

1. Remove both Plow Springs if installed. Set aside as they will be reinstalled later.

2. Remove the original Lift Lock Latch (C) by removing the 6 Bolts (A) and 6 Nuts (B) as shown in **Figure 2**.

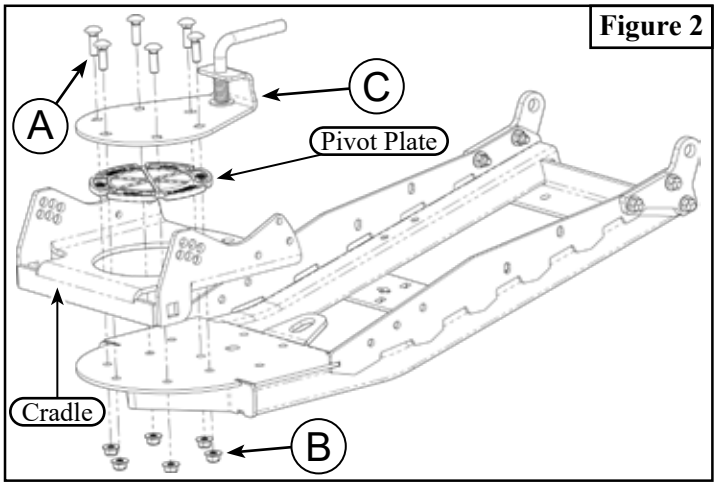

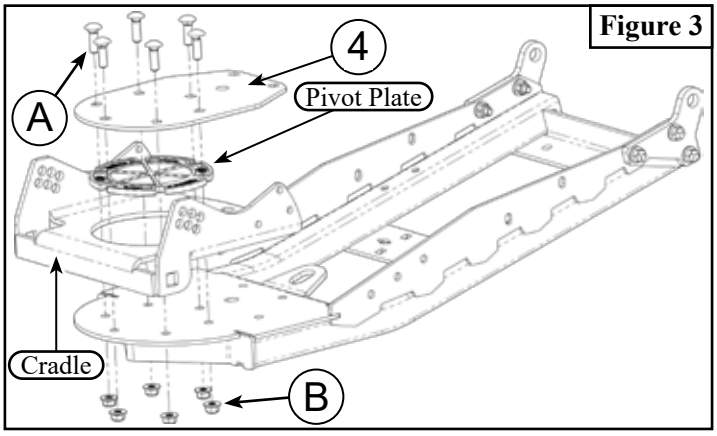

3. Install the Flat Cradle Keeper (4) using the same 6 Bolts (A) and 6 Nuts (B) as shown in **Figure 3**. If drilling is required as shown in **Figure 4**, tighten the 6 bolts (A) evenly. If these rear holes exist through all components, leave Cradle Keeper (4) loose and skip to step 5. *Do not overtighten Bolts (A) or it may become difficult to rotate the blade.*

4. If drilling is required for the rear-most bolts in the Cradle Keeper (4), use the Cradle Keeper as a template to drill through the push tube bulkhead with a 13/32” drill bit as shown in **Figure 4**.

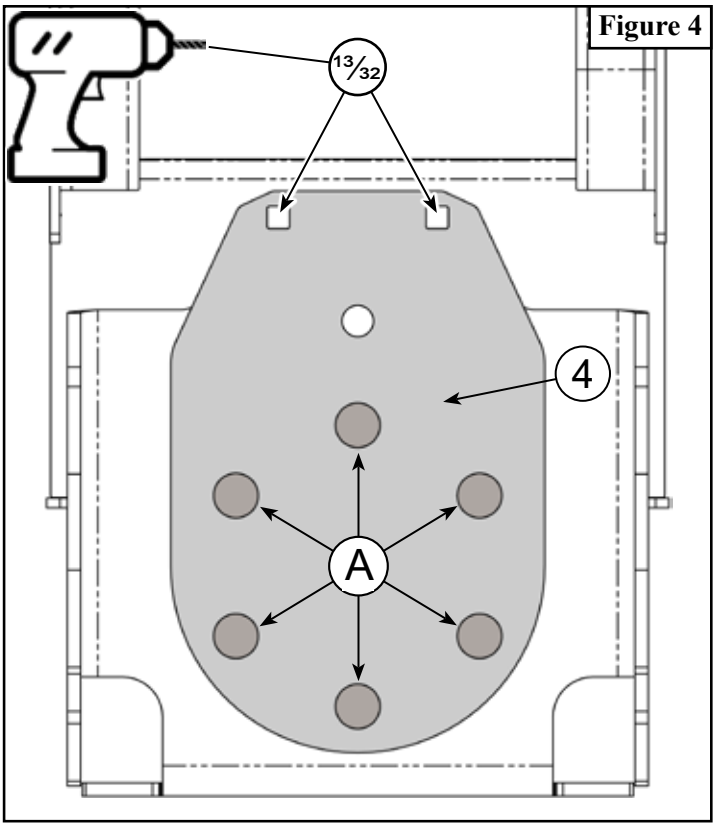

©2024 Copyright Kappers Fabricating, Inc. All rights reserved

BRACKET INSTALLATION INSTRUCTIONS

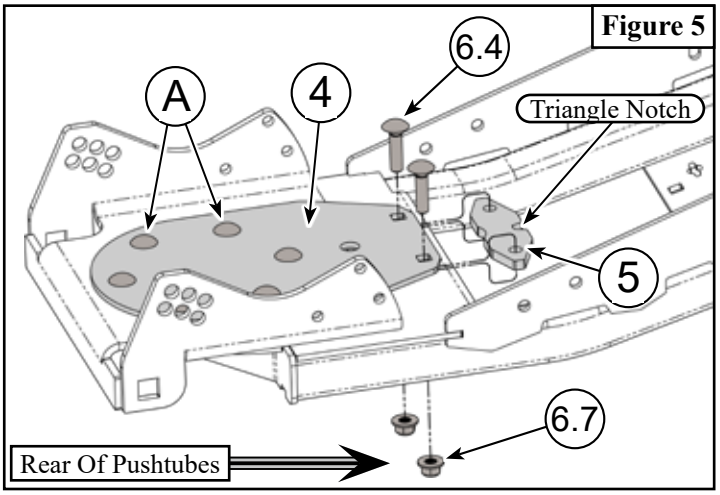

5. Once your rear holes are drilled, loosen the 6 bolts (A) to install the Lift Latch Stop (5) between the Flat Cradle Keeper (4) and push tube bulkhead. **The triangle notch in the Lift Latch Stop (5) should be oriented towards the rear of the pushtubes (front of the machine).** Secure components with Bolts (6.4) and Nuts (6.7). See **Figure 5**.

6. Attatch Rear Tube Bracket (3) to the push tube using Bolts (6.2 & 6.3) and Nuts (6.6). Place bolts (6.2) through washers (6.5) before placing through the push tubes. As shown in **Figure 6**.

7. Loosely assemble Backer Plate (2) to the Cradle Bracket (1), using Carriage Bolts (6.3) and Lock Nuts (6.6), as shown in **Figure 7**.

8. Place Cradle Bracket (1) over the Cradle and attatch with Bolts (6.1) and Lock Nuts (6.6), as shown in **Figure 7**.

9. Tighten all hardware evenly.

10. Springs will attatch to the bent flange on the Cradle Bracket (1). As shown in **Figure 8**.

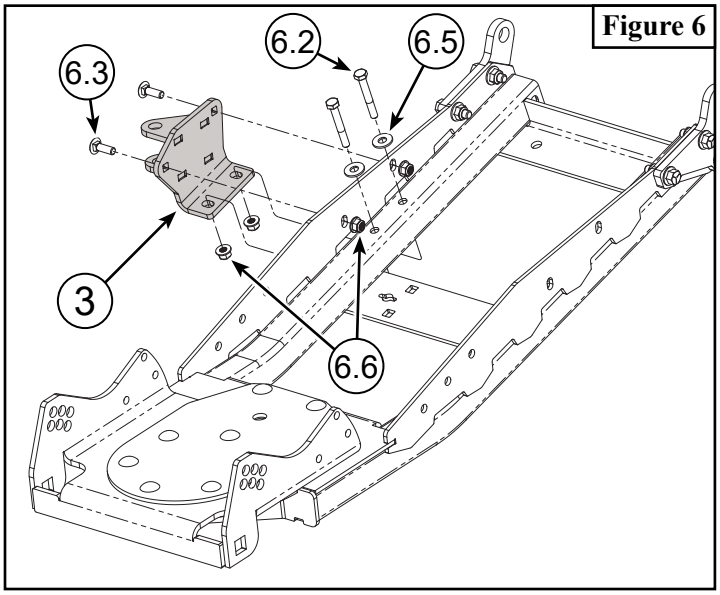

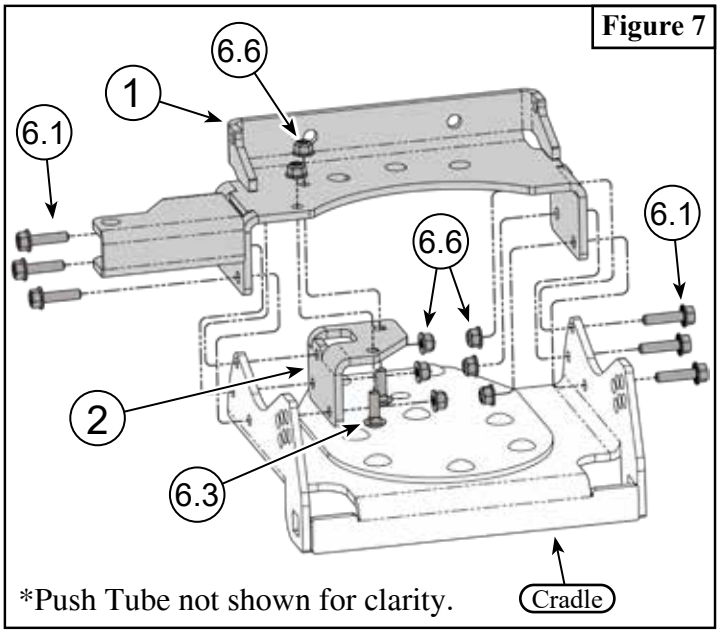

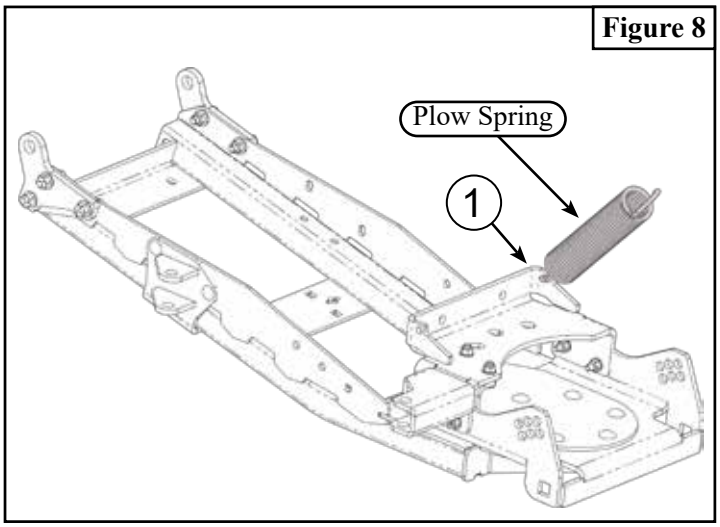

©2024 Copyright Kappers Fabricating, Inc. All rights reserved

ACTUATOR INSTALLATION INSTRUCTIONS

Note: Actuator is not included with this kit. Items below come with kit #ACT203

Item #	Qty.	Description
7	1	Actuator
8	1	Hardware Kit HK-381
8.1	2	M14-2.00 X 80 Hex Bolts GR8.8
8.2	12	M14 Flat Washer
8.3	2	M14 X 2.00 Hex Lock Nut

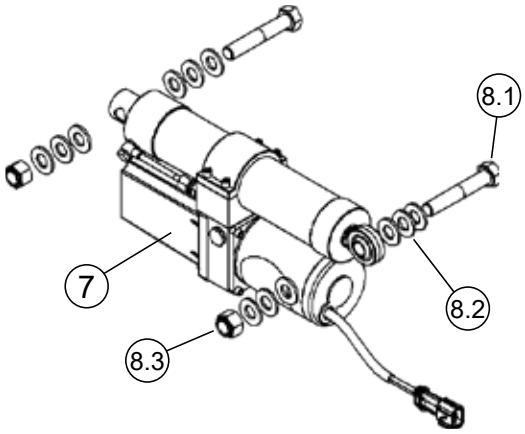

INSTALLATION INSTRUCTIONS

1. Place bolt (8.1) through flat washer (8.2), top tab of rear actuator bracket, flat washer (8.2), Hydraulic Actuator (7), flat washer (8.2), bottom tab of rear actuator bracket, and flat washer (8.2). Place nylock nut (8.3) onto bolt (8.1) as shown in Figure 9. (This orientation of hardware is just a guideline)

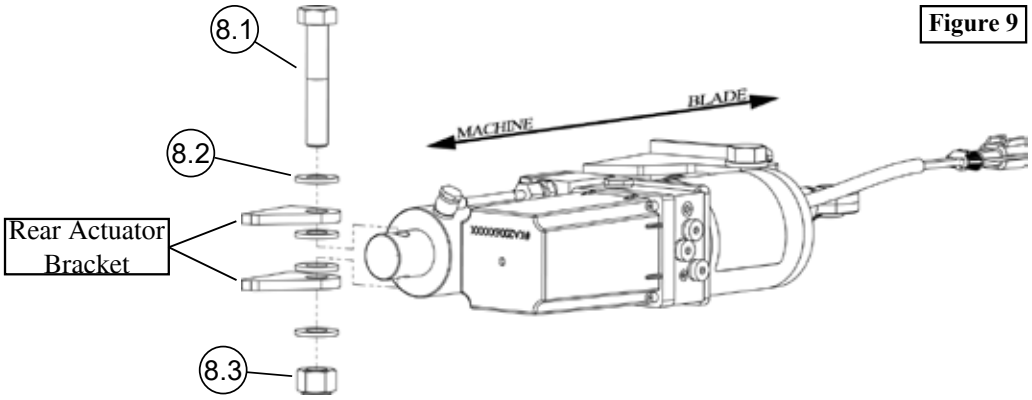

Figure 9

2. Repeat previous step for mounting the front half of the actuator, as shown in Figure 10. It is most important that you use the washers to make sure that the actuator is parallel to the cradle swivel point, as shown in Figure 11. Both front, and rear bolts should not be tight, thread the nut on until Nylock is engaged.

   Note: Periodically apply lubricant to actuator attachment points.

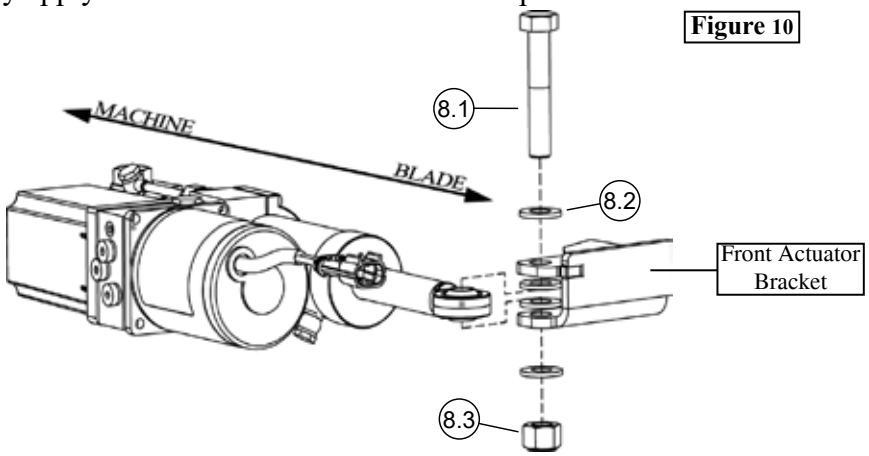

Figure 10

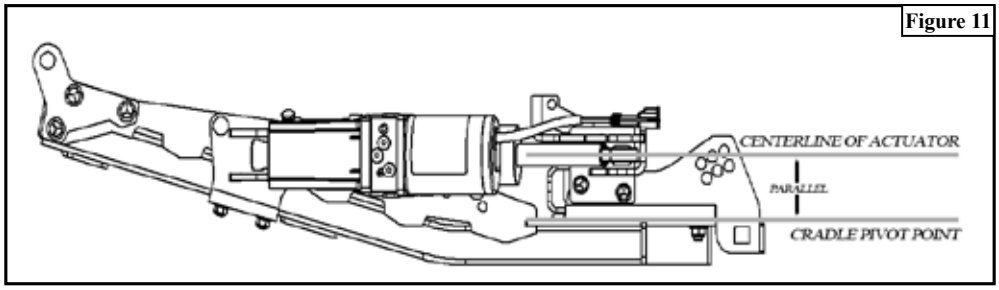

Figure 11

©2024 Copyright Kappers Fabricating, Inc. All rights reserved

UTV PRO 2.0 TRACK EXTENSION ACTUATOR BRACKET

Plow Accessory **PART #106335 Rev. B**

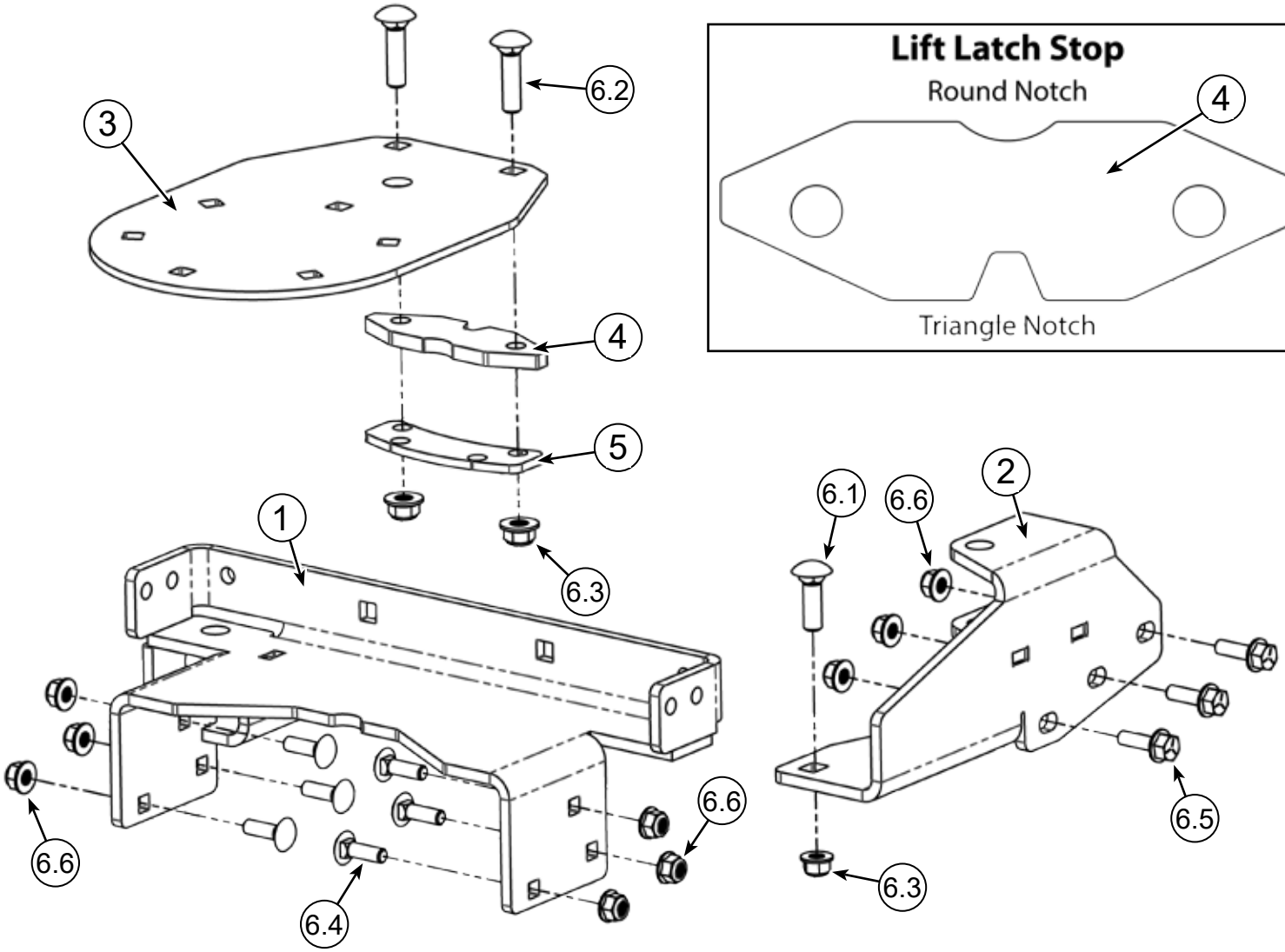

Item #	Qty.	Description
1	1	Actuator Cradle Bracket
2	1	Rear Actuator Bracket
3	1	Flat Cradle Keeper
4	1	Lift Latch Stop
5	1	Track Extension Spacer
6	1	Hardware Kit (HK-406)

Item #	Qty.	Description
6.1	1	3/8”-16 x 1.25 Carriage Bolt GR5
6.2	3	3/8”-16 x 1.50 Carriage Bolt GR5 -1 NOT USED
6.3	4	3/8”-16 Hex Flange Nylock Nut -1 NOT USED
6.4	6	5/16”-18 x 1.00 Carriage Bolt GR5
6.5	3	5/16”-18 x 1.00 Hex Flange Bolt GR5
6.6	9	5/16”-18 Hex Flange Nylock Nut

INSTALLATION INSTRUCTIONS

Note: Make sure all hardware needed to complete this mount is in the package. Thoroughly read through and understand the instructions before installing.

Note: This kit requires UTV Track Extension Kit #106330 (Sold Separately) to be installed prior to installing the Track Extension Actuator Brackets.

1. Remove both Plow Springs if installed. Set aside as they will be reinstalled later.

2. Remove the original Lift Lock Latch (C) by removing the 6 Bolts (A) and 6 Nuts (B) as shown in **Figure 2**. Bolt (D) can be removed and discarded.

3. Install the Flat Cradle Keeper (3) using the same 6 Bolts (A) and 6 Nuts (B) as shown in **Figure 3**. If drilling is required as shown in **Figure 4**, tighten the 6 bolts (A) evenly. If these rear holes exist through all components, leave Cradle Keeper (3) loose and skip to step 5. *Do not overtighten Bolts (A) or it may become difficult to rotate the blade.*

4. If drilling is required for the rear-most bolts in the Cradle Keeper (3), use the Cradle Keeper as a template to drill through the track extension and push tubes with a 13/32” drill bit as shown in **Figure 4**.

5. Once your rear holes are drilled, loosen the 6 bolts (A) to install the Lift Latch Stop (4) between the Flat Cradle Keeper (3) and track extension. **The triangle notch in the Lift Latch Stop (4) should be oriented towards the rear of the pushtubes (front of the machine).** See **Figure 5**. (Next Page)

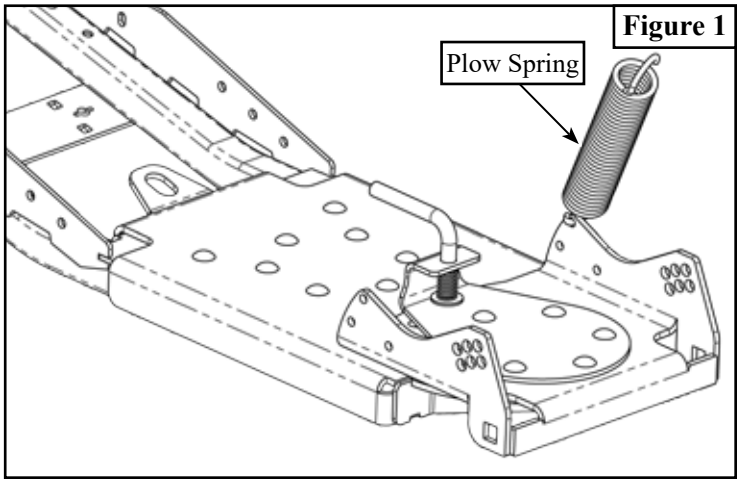

Figure 1

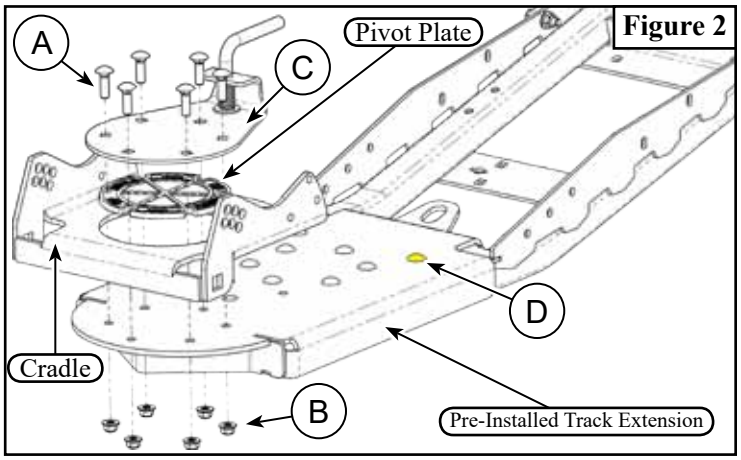

Figure 2

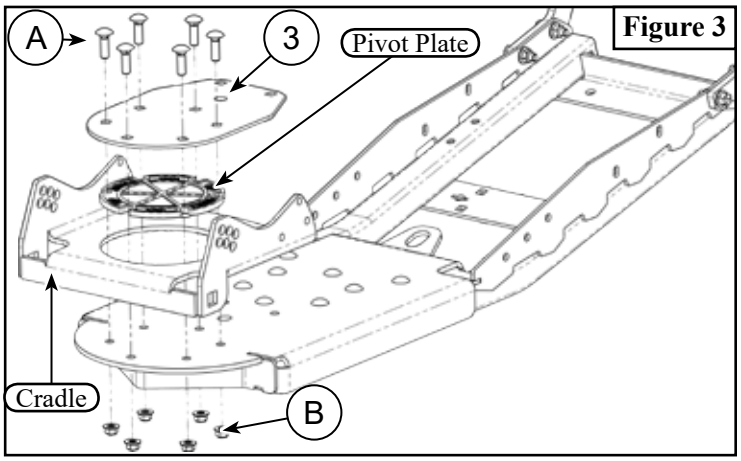

Figure 3

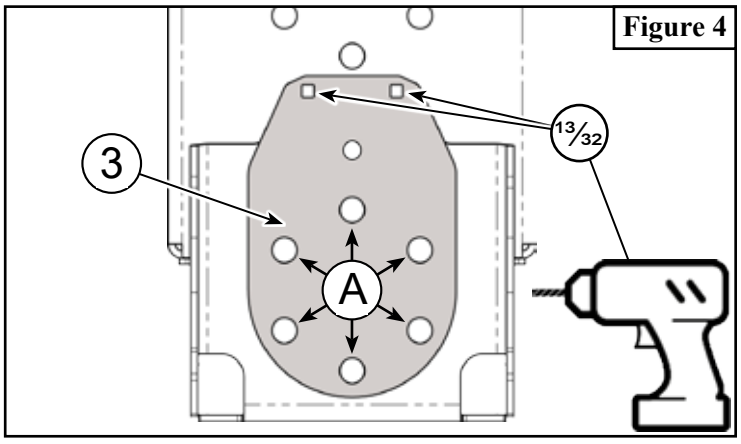

Figure 4

©2023 Copyright Kappers Fabricating, Inc. All rights reserved

INSTALLATION INSTRUCTIONS

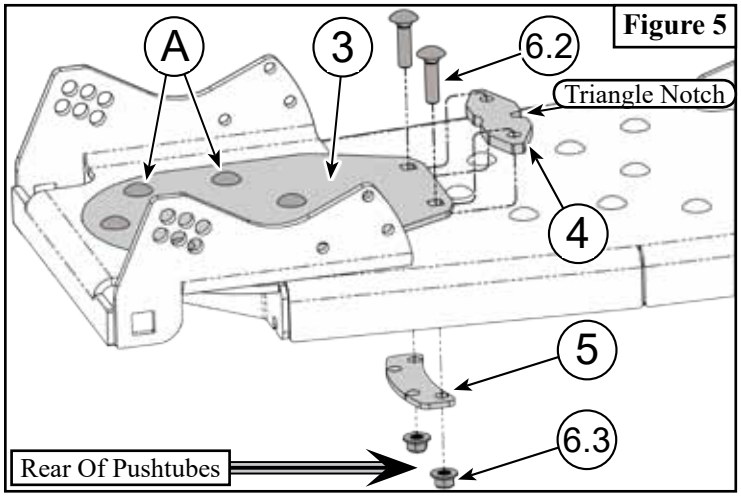

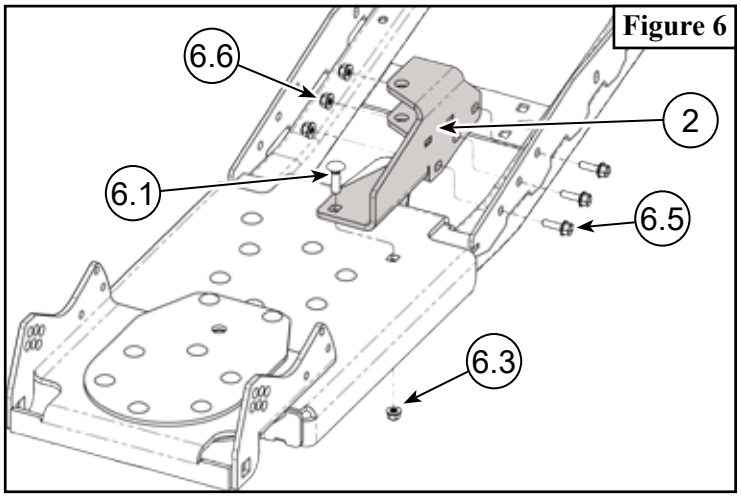

6. Install the Track Extension Spacer (5) under the track extension. This component should follow the contour of the push tube bulkhead, as shown in **Figure 5**. Secure all components from steps 5 and 6 with Bolts (6.2) and Nuts (6.3)

7. Set Rear Actuator Bracket (2) in place and loosely secure using Bolts (6.1, 6.5) and nuts (6.3, 6.6) as shown in **Figure 6**.

8. Set Actuator Cradle Bracket (1) inside of the cradle and loosely secure using Bolts (6.4) and Nuts (6.6) as shown in **Figure 7**.

9. Tighten all hardware evenly

10. Plow Springs will attatch to the front cradle bracket (1). The rear most hole is the stock position, as shown in **Figure 8.**

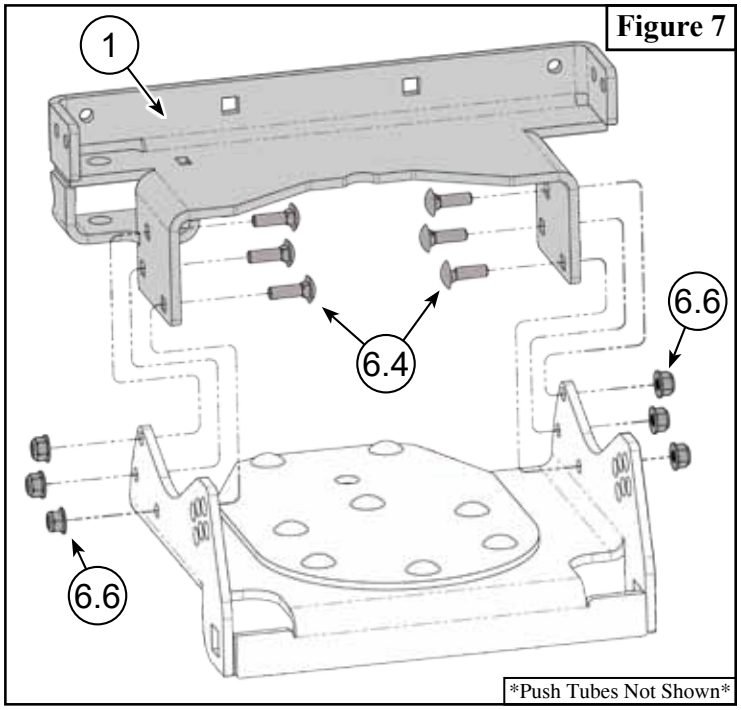

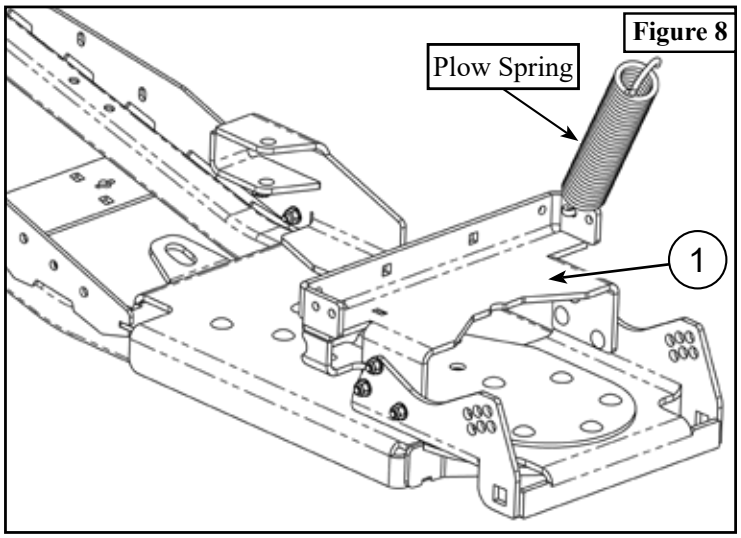

ACTUATOR INSTALLATION INSTRUCTIONS

Note: Actuator is not included with this kit. Items below come with kit #ACT203

Item #	Qty.	Description
7	1	Actuator
8	1	Hardware Kit HK-381
8.1	2	M14-2.00 X 80 Hex Bolts GR8.8
8.2	12	M14 Flat Washer
8.3	2	M14 X 2.00 Hex Lock Nut

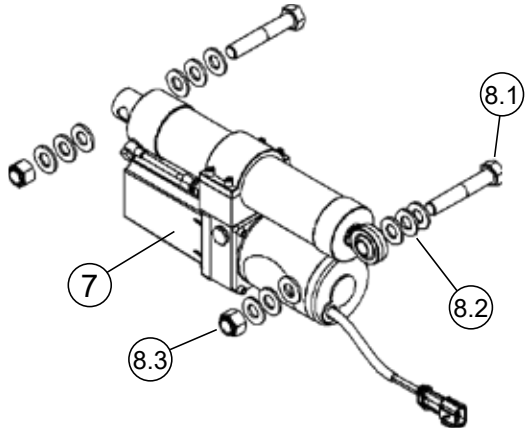

INSTALLATION INSTRUCTIONS

1. Place bolt (8.1) through flat washer (8.2), top tab of rear actuator bracket, flat washer (8.2), Hydraulic Actuator (7), flat washer (8.2), bottom tab of rear actuator bracket, and flat washer (8.2). Place nylock nut (8.3) onto bolt (8.1) as shown in **Figure 9**. (This orientation of hardware is just a guideline)

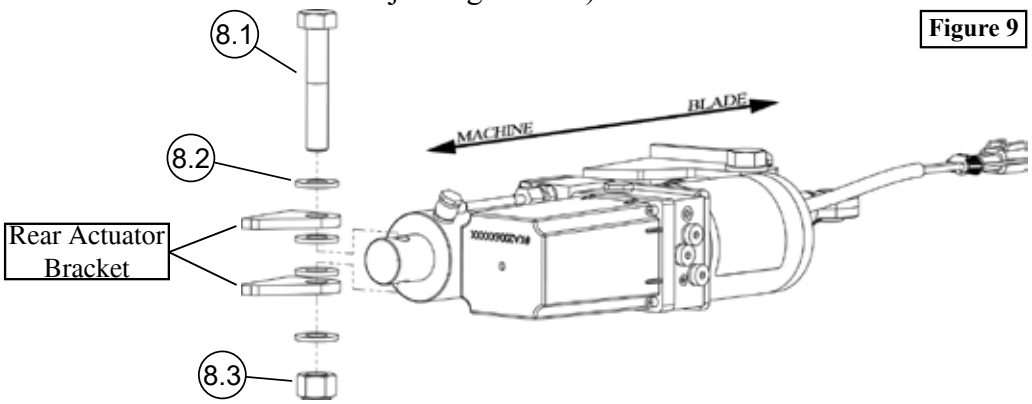

2. Repeat previous step for mounting the front half of the actuator, as shown in **Figure 10**. It is most important that you use the washers to make sure that the actuator is parallel to the cradle swivel point, as shown in **Figure 11**. Both front, and rear bolts should not be tight, thread the nut on until Nylock is fully engaged.

   Note: Periodically apply lubricant to actuator attachment points.

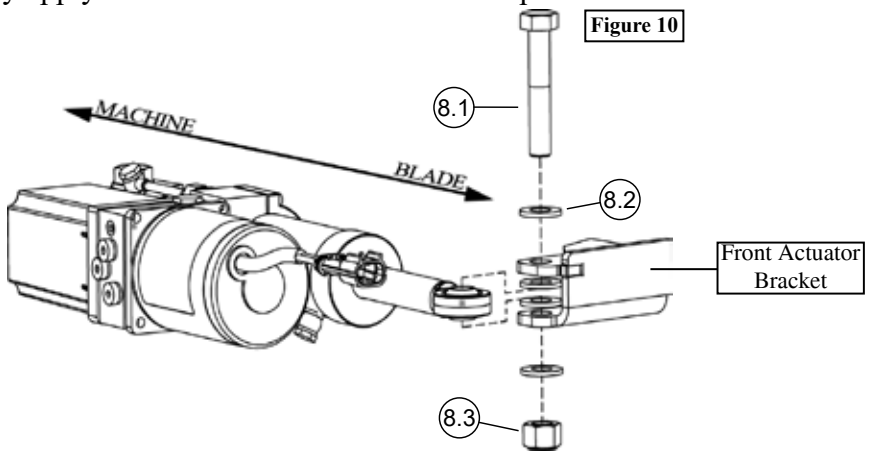

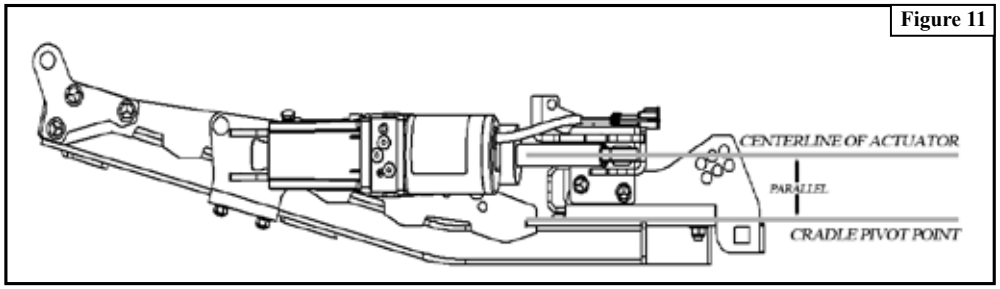

©2023 Copyright Kappers Fabricating, Inc. All rights reserved

WIRE HARNESS - HYDRAULIC ACTUATOR

Wire Harness PART #106940 Rev A.1

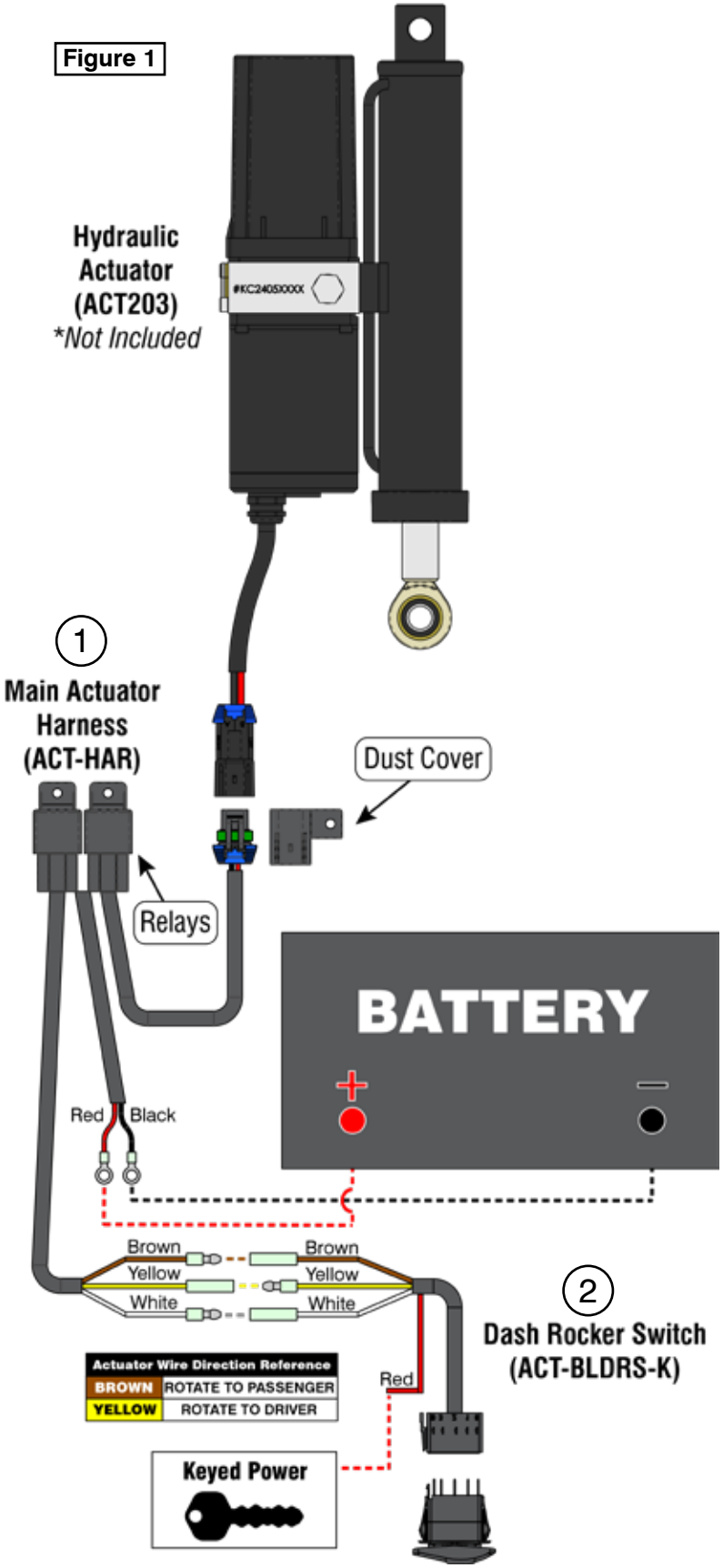

Kit Components:		
Item #	**Qty.**	**Description**
1	1	ACT-HAR (Actuator Main Relay Harness)
2	1	(ACT-BLDRS-K) Dash Rocker Switch

Note: Make sure components needed to complete this installation are in the package. Thoroughly read through and understand the instructions before installing.

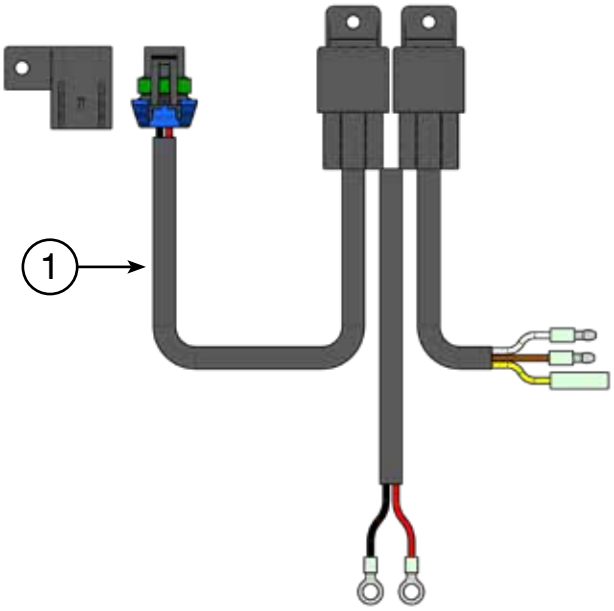

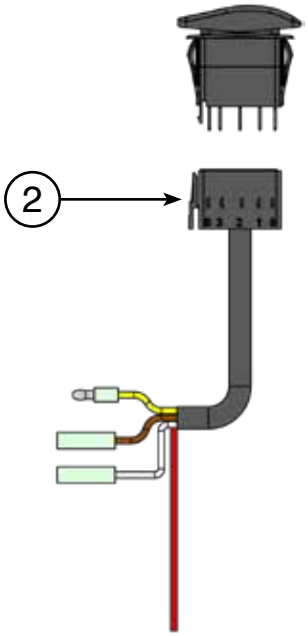

©2026 Copyright Kappers Fabricating, Inc. All rights reserved

INSTALLATION INSTRUCTIONS

⚠ CAUTION

Never route electrical cables across any sharp edges, through or near moving parts, or near parts that become hot.

Installation Instructions

1. Connect the Red and Black wires from the **Main Actuator Harnesses (1)** to the battery. See **Figure 1** for reference.
   - Red wires to the Positive (+) terminal
   - Black wires to the Negative (-) terminal
2. Splice the end of the red wire from the **Dash Rocker Switch (2**) into a power source that is controlled by the ignition. Use a test light to identify a wire that receives power only when the key is in the ON position.
3. Connect the Brown, Yellow, and White wires from the **Dash Rocker Switch (2)** to the **Main Actuator Harness (1)**:
   - Brown (Female) to Brown (Male)
   - Yellow (Male) to Yellow (Female)
   - White (Female) to White (Male)
4. Find a clean and dry location to mount the **Relays**. Make sure the location you choose allows sufficient clearance from all metal components. Drill a mounting hole if required. Secure with zip ties or self tapping screws.
5. Secure the **Dust Cover** of the **Main Actuator Harness (1)** to the front of the machine with zip ties. Position it so the plug connecting to the **ACT203** is easily accessible when the plow is not in use.
6. For additional control options for the Hydraulic Actuator, consider the hand remote (**ACT-HR)**, which enables control of both the actuator and the winch with a single remote.

Mounting the Dash Rocker Switch

1. Most UTV's and SxS's have predefined switch locations that are pre-marked for mounting and require finish cut with a knife.
2. Use cut-out dimensions shown below to cut out the switch location if your dash doesn't have the pre marked areas. Measure 1" mark above the template to be sure print is scaled correctly. See **Figure 2.**
3. Before installing the switch in place, ensure it is connected to the rest of the harness by plugging the **Rocker Switch** into the **Connector Housing**. Be sure it is orienated correctly. See **Figure 3.**

AFTER PRINTING, LINE BELOW SHOULD MEASURE 1"

← 1" →

Figure 2

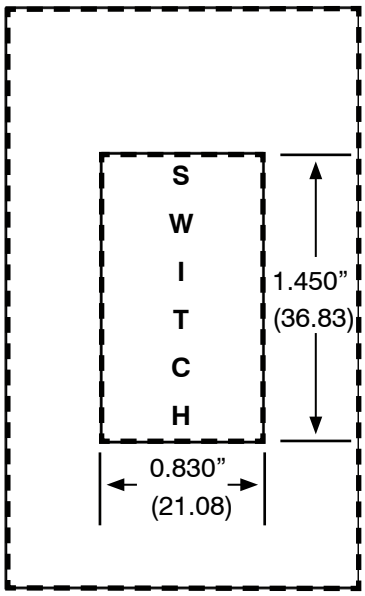

CUT-OUT TEMPLATE

Figure 3

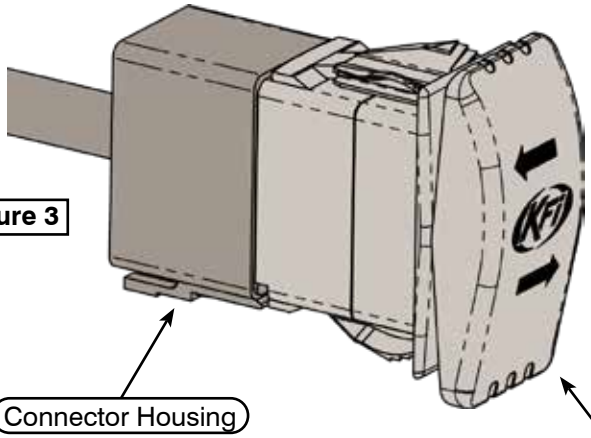

Insert the **Rocker Switch** into the **Connector Housing** before mounting it in the dash or a suitable location. Ensure the thicker end of the switch is positioned at the top, with the KFI logo oriented correctly.

©2026 Copyright Kappers Fabricating, Inc. All rights reserved

QUICK PLOW PULLEY - STEEL CABLE

Plow Pulley PART #106680 Rev A

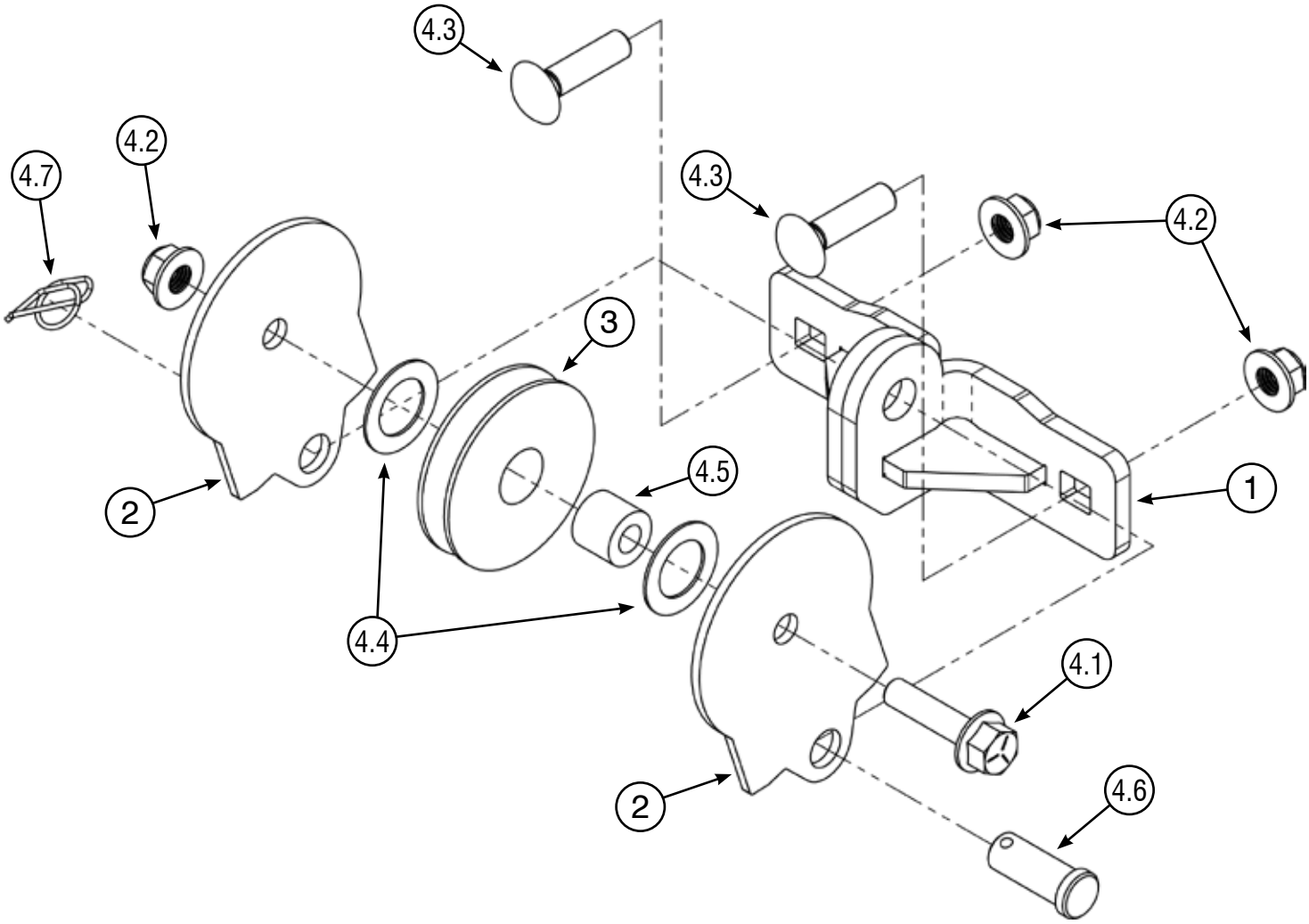

Kit Components:

Item #	Qty.	Description
1	1	Pulley Mount (106682)
2	2	Side Plate (106681)
3	1	Steel Plow Roller Pulley (P800280)
4	1	Hardware Kit (HK-456)
4.1	1	3/8”-16 X 1.50 Hex Flange Bolt
4.2	3	3/8”-16 Hex Flange Nut Nylock

Item #	Qty.	Description
4.3	2	3/8”-16 X 1.50 Carriage Bolt
4.4	2	1.25 X .78 X .04 Spacer (P800311)
4.5	1	Plow Pulley Bushing (P800327)
4.6	1	Clevis Pin 1/2 x 1” Zinc (P800637)
4.7	1	Cotter Pin 1/2” (P800609)

©2025 Copyright Kappers Fabricating, Inc. All rights reserved

12/24/25

INSTALLATION INSTRUCTIONS

Notice

Torque bolts to ANSI Specs (or OEM specs if applicable), unless otherwise stated. After the first use and at the start of each season, check torque.

Note: Make sure all hardware needed to complete this mount is in the package. Thoroughly read through and understand the instructions before installing.

Installation Instructions

1. Begin assembling the Snatch Block as shown in **Figure 1**. Insert the Flange Bolt **(4.1)** through Side Plate **(2)**, then Spacer **(4.4)**, then the Plow Pulley Bushing **(4.5)** inside the Steel Plow Roller Pulley **(3)**, theh the second Spacer **(4.4)**, and finally the opposite Side Plate **(2)**. Secure the assembly with the Nut **(4.2)**. ***Do not overtighten; the pulley should spin freely with the cable.***

2. Install the Pulley Mount **(1)** using the Carriage Bolts **(4.3)** and Nuts **(4.2)** in one of the three available ***Push Tube Positions***, as shown on the ***Page 3***. Refer to **Figure 2** for an example of the installation in **Position 2**.

3. Next, insert the Clevis Pin **(4.6)** through Side Plate **(2)** of the Snatch Block, then through the Pulley Mount **(1)**, and out through the opposite Side Plate **(2)**, as shown in **Figure 3**. Secure the Clevis pin **(4.6)** with the Cotter Pin **(4.7)**.

4. To install the cable, remove the Cotter Pin **(4.6)** and Clevis Pin **(4.7)**. Place the Snatch Block around the cable as shown in **Figure 4**, then reinstall the Clevis and Cotter pins.

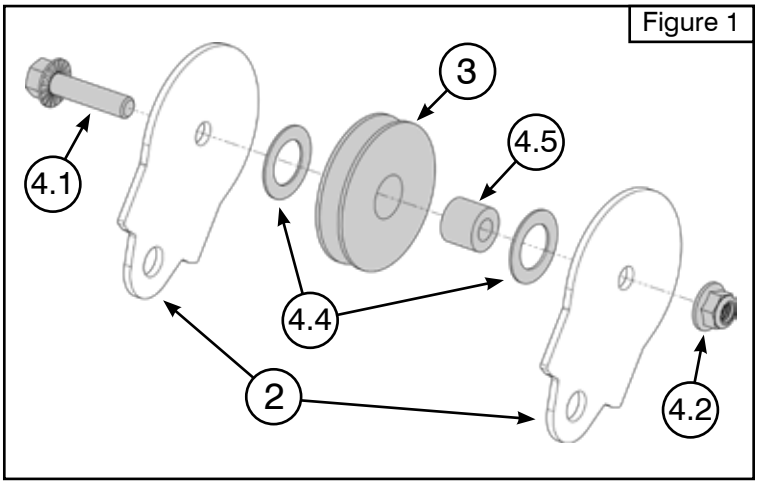

Figure 1

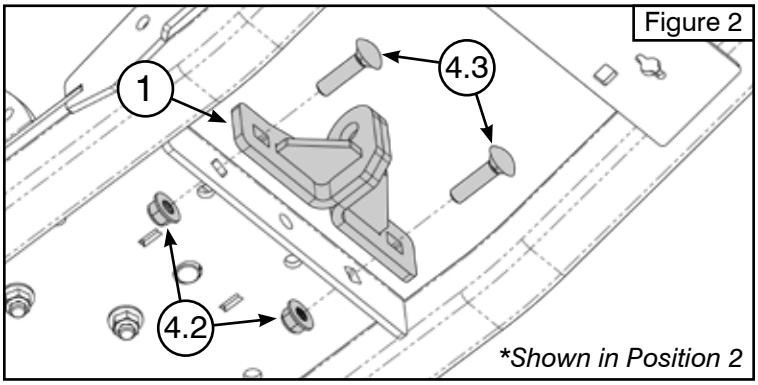

Figure 2

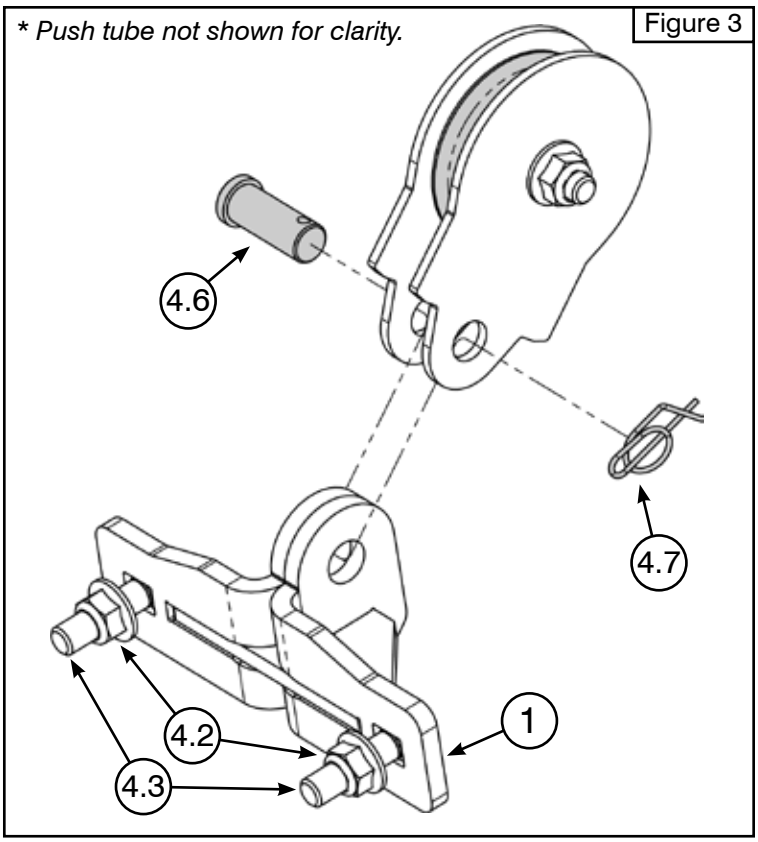

Figure 3

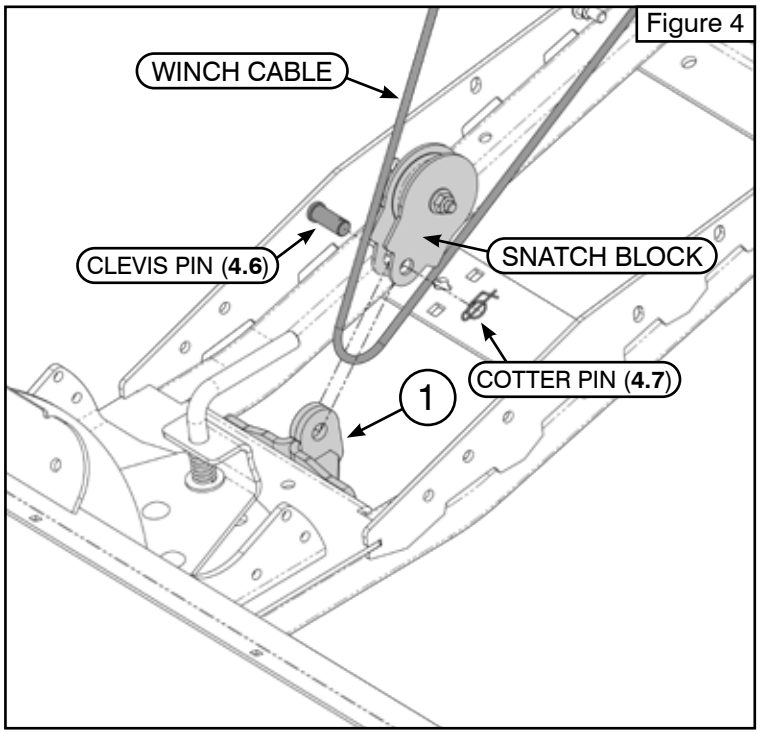

Figure 4

©2025 Copyright Kappers Fabricating, Inc. All rights reserved

THIS MOUNT RECOMMENDS A PLOW PULLEY

WHY USE A PULLEY WHEN PLOWING?

When the fairlead and plow pin point are too close, the winch line pulls at a shallow angle. This puts extra strain on the winch and makes lifting less effective. Adding a pulley gives the line a smoother, more vertical pull, improving lift and reducing stress on the winch and plow system. For more information, visit KFIproducts.com.

Steel Cable Winches

- *Plow Fairlead Pulley* at the winch
  - Standard or Wide
- *Quick Plow Pulley* (#106680) on the push tube
- Pulley rotates with winch cable
- Durable Steel Rollers

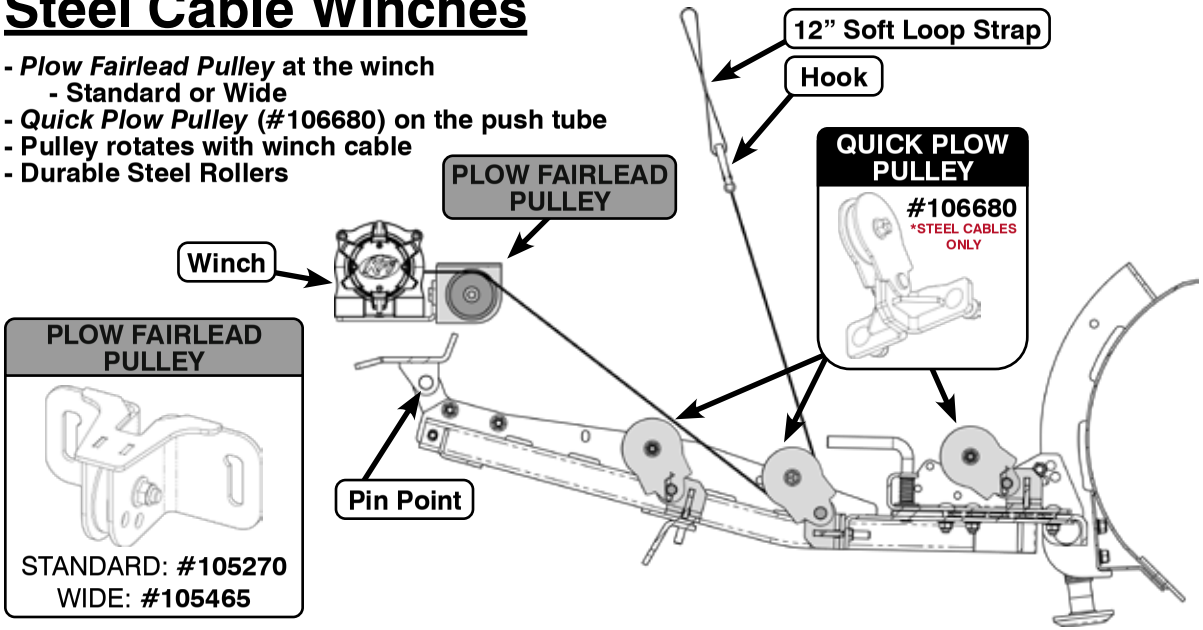

PLOW FAIRLEAD PULLEY

STANDARD: **#105270**
WIDE: **#105465**

Synthetic Cable Winches

- We *DO NOT* recommend using a Hawse Fairlead for plowing - Replace with a KFI Synthetic Roller Fairlead
- *Quick Plow Pulley* (#106745) on the push tube
- Pulley *does not* rotate with winch rope
- Aluminum Roller

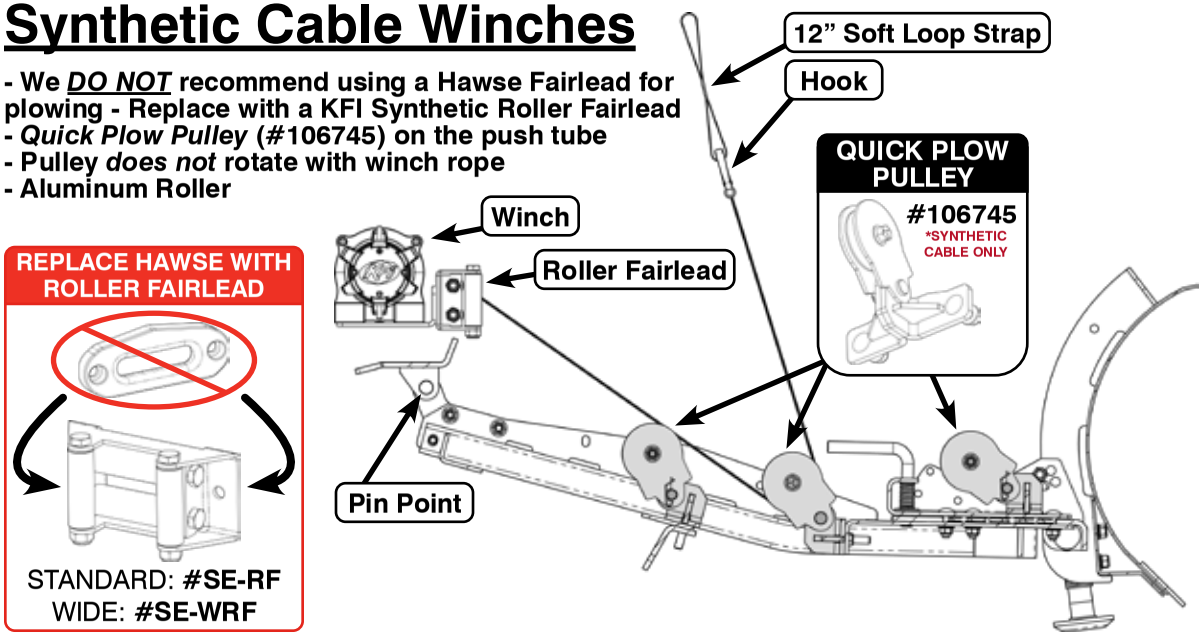

REPLACE HAWSE WITH ROLLER FAIRLEAD

STANDARD: **#SE-RF**
WIDE: **#SE-WRF**

PUSH TUBE POSITIONS

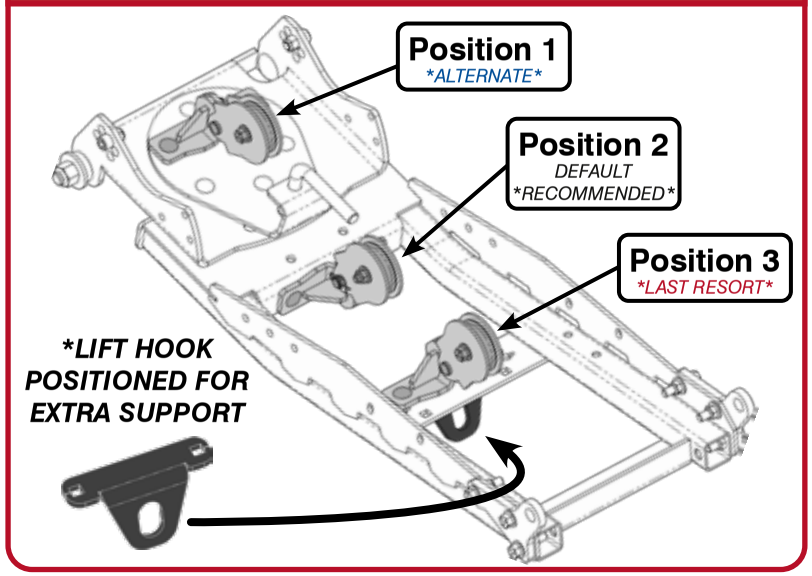

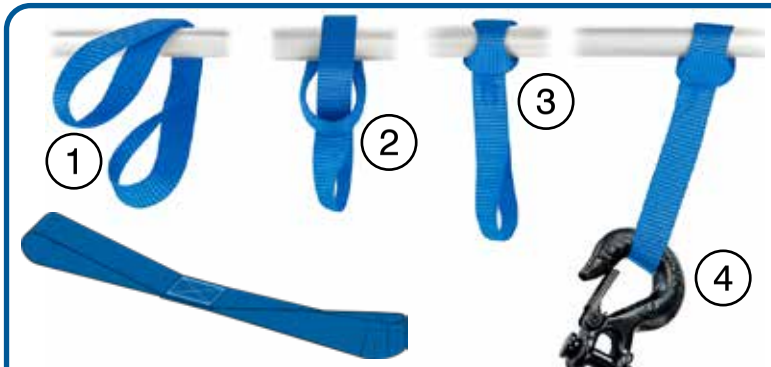

12" Soft Loop Strap #106470

The 12" Soft Loop Strap can be used in two configurations:

1. Wrapped once around a solid anchor point as shown above. Follow **Steps 1-4**.
2. Wrapped around the bumper in a "U" shape, allowing the hook to pass through both strap loops. See **Step 1 Only**.

©2025 Copyright Kappers Fabricating, Inc. All rights reserved

UTV Plow Track Extension

Plow Accessory **PART #106330 Rev D**

Kit Components:		
Item #	Qty.	Description
1	1	Push Tube Track Extension
2	1	Hardware Kit (HK-393)
2.1	8	3/8”-16 x 1.00 Carriage Bolt
2.2	2	3/8”-16 x 1.50 Carriage Bolt (NOT USED)
2.3	10	3/8”-16 Hex Flange Nylock Nut (NOT ALL USED)

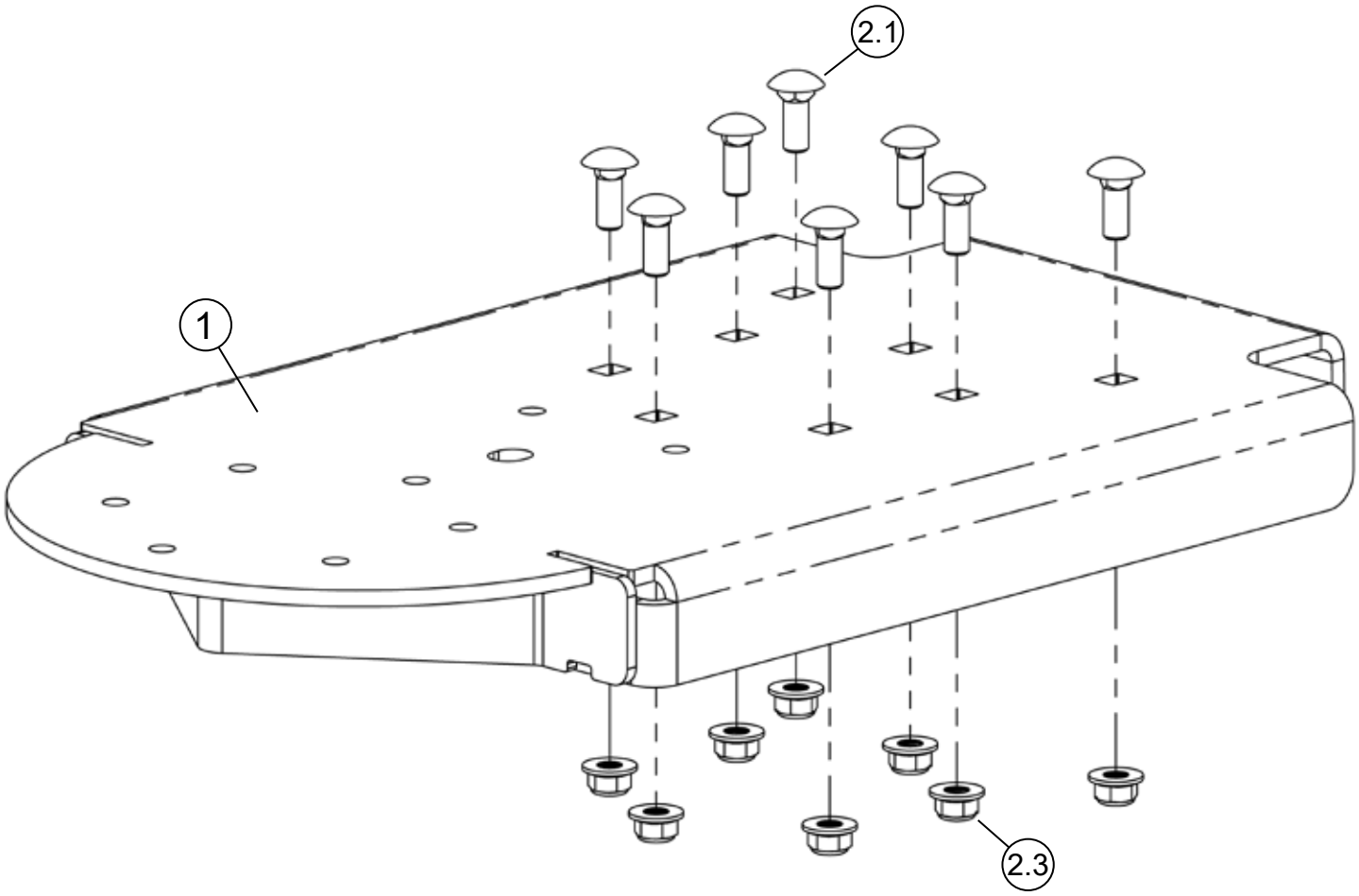

INSTALLATION INSTRUCTIONS

Note: Make sure all hardware needed to complete this mount is in the package. Thoroughly read through and understand the instructions before installing.

1. Unbolt hardware (A) and remove cradle (B), Lift latch assembly (C), pivot bushing (D), cable hook bracket (E) shown in **Figure 1**.

2. Reinstall pivot bushing (D), lift latch assembly (C), cradle (B), and cable hook bracket (E) using hardware (A) removed in step 1 onto UTV Track Extension (1) as shown in **Figure 2**.

3. Install UTV Track Extension (1) onto push tubes using bolts (2.1) and nuts (2.3) as shown in **Figure 2**. **NOTE:** If the push tube does not have rear holes, drilling is required. **See Drilling Note Below.**

4. Tighten all hardware evenly.

5. The lift hook can be relocated if it gives a better lift angle from your machine, 3 options are shown in **Figure 4**.

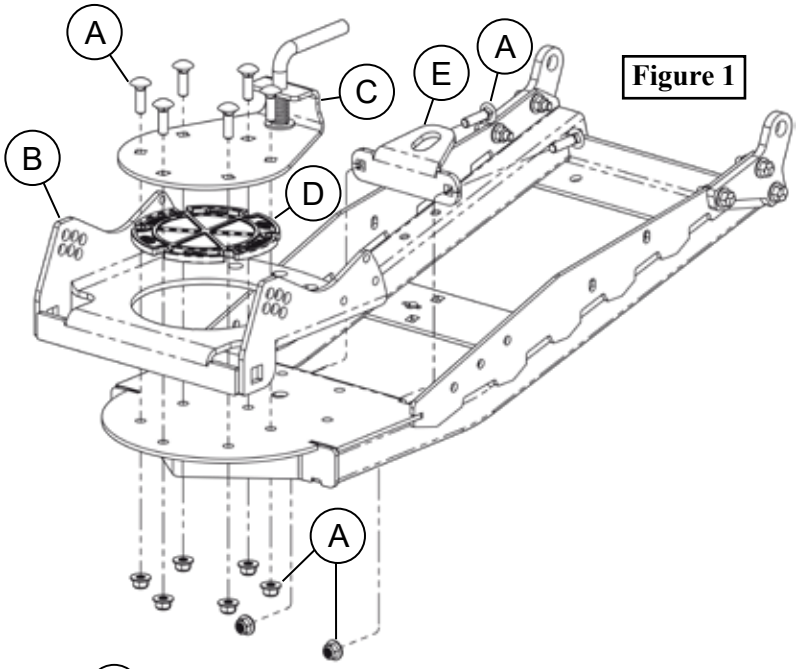

Figure 1

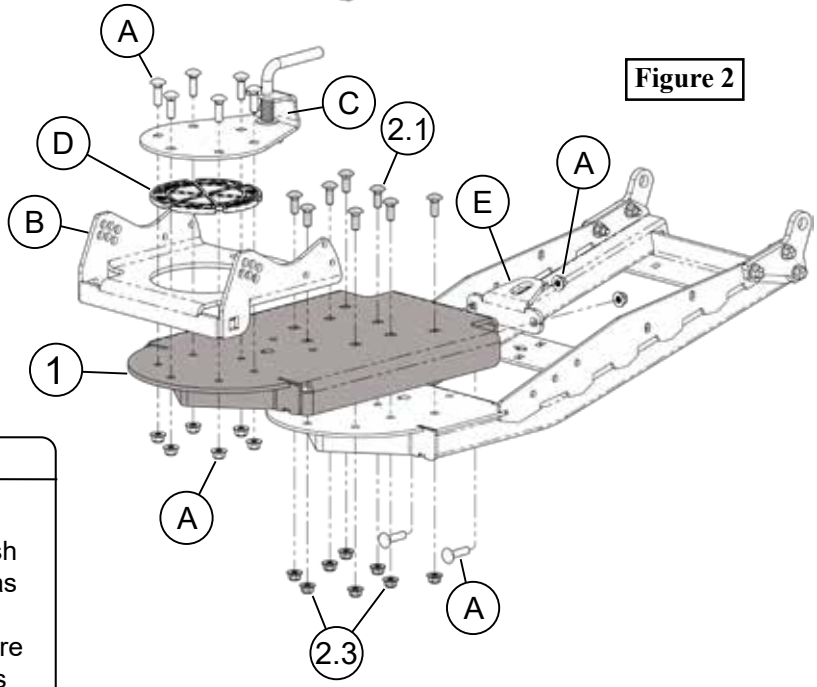

Figure 2

DRILLING NOTE

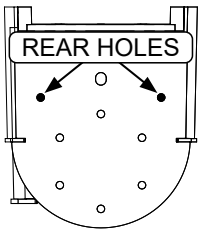

If push tube does not have rear holes, drilling is required. Bolt ITEM 1 to the push tube as shown in **Figure 2.** Use ITEM 1 as a template, drill 2 holes through the push tube using a 13/32" drill bit. Once holes are drilled, finish installing the remaining bolts and nuts (2.1 and 2.3).

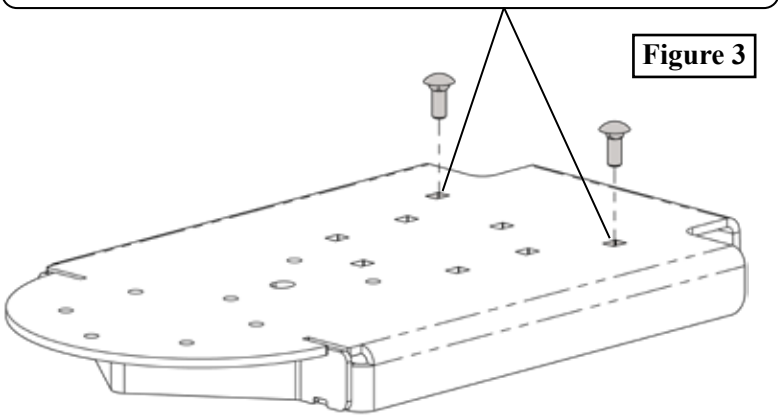
Figure 3

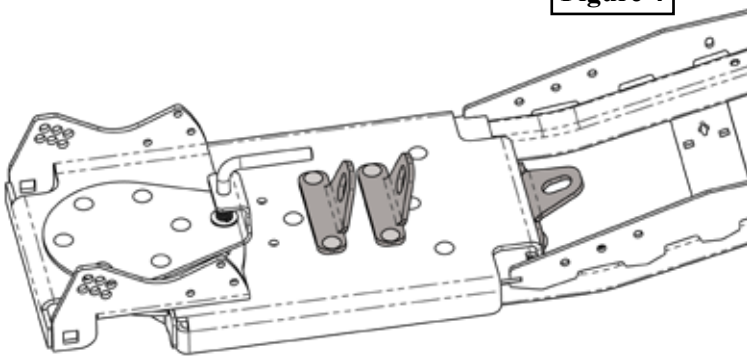
Figure 4

©2024 Copyright Kappers Fabricating, Inc. All rights reserved

PRO SERIES PLOW SIDE SHIELD

Plow Accessory PART # 105540
Hardware Kit: HK-105

Kit Components:

Qty.	Part Description
1	Plow Side Shield
1	Upper Shield Bracket (triangle)
1	Middle Shield Bracket (round)
1	Lower Shield Bracket (square)
8	5/16”-18 x 1.00” Carriage Bolt (E)
1	5/16”-18 x 1.25” Carriage Bolt (F)
8	5/16”-18 Nylock Flanged Nut

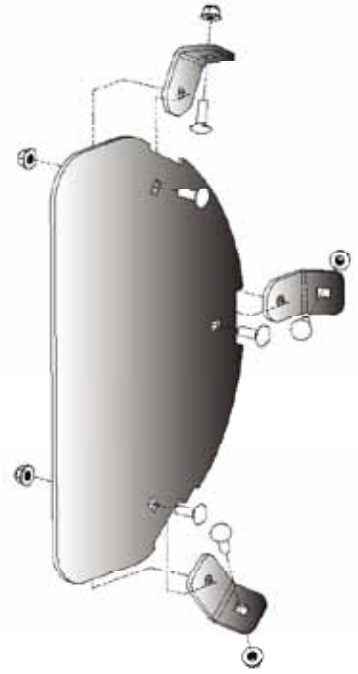

“Figure 1”

INSTALLATION INSTRUCTIONS:

1. Cut out Template printed on Page 2 and mark holes to be drilled using the template. *If you only intend to install one shield, decide which end best suits your purpose.* ***Note:*** See Page 3 for template placement.

2. Using a 21/64” up to 3/8” bit, drill the holes through your plow blade in marked locations.

   Note: *It is always best practice to drill a smaller pilot hole before drilling a large hole in steel.*

3. Install the UPPER (A), MIDDLE (B) and LOWER (C) brackets to the side shield using the 1” carriage bolts and nuts. See ***Figure 2*** for bracket difference chart. Side Shield has a notch (D) that indicates the bottom. This notch allows clearance for the wear bar. See ***Figure 3*** for proper right and left install.

   Note: *these brackets have specific angles for each location and can NOT be installed in a different location, also the shield can*

   NOT be installed upside down.

4. Install Side Shield Assembly to plow blade using carriage bolts and nuts. The UPPER and MIDDLE brackets will use 1” carriage colts (E) and the LOWER bracket will use the 1-1/4” carriage bolt (F).

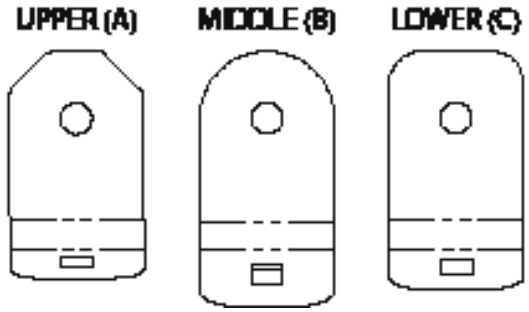

“Figure 2 Bracket Difference Chart”

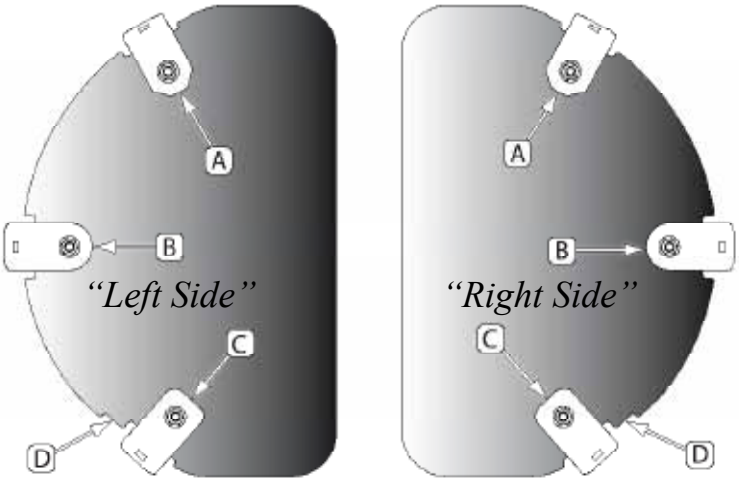

“Figure 3 Bracket Install”

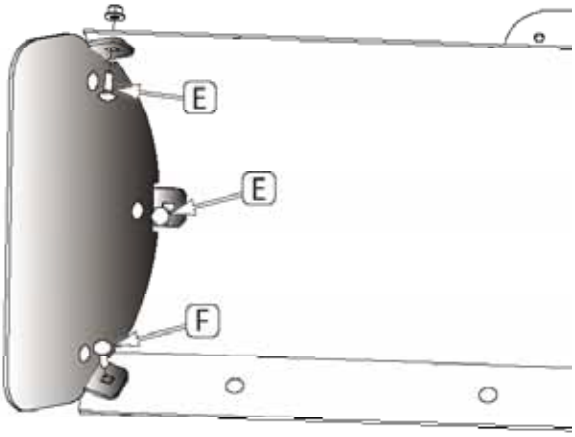

“Figure 4 Blade Install”

©2013 Copyright Kappers Fabricating, Inc. All rights reserved

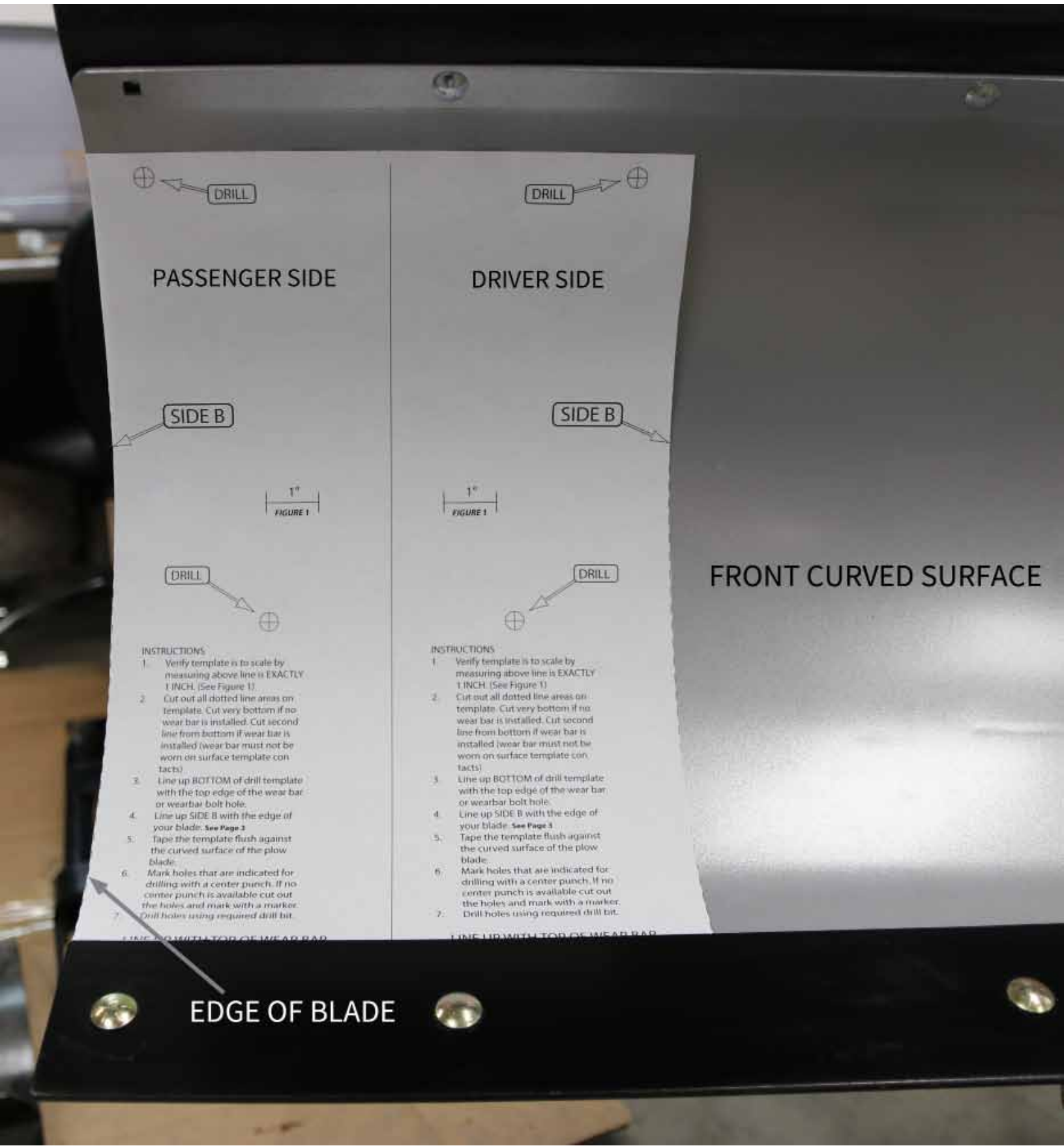
DRILL
PASSENGER SIDE
SIDE B
1"
FIGURE 1
DRILL
INSTRUCTIONS
1. Verify template is to scale by measuring above line is EXACTLY 1 INCH. (See Figure 1)
2. Cut out all dotted line areas on template. Cut very bottom if no wear bar is installed. Cut second line from bottom if wear bar is installed (wear bar must not be worn on surface template contacts)
3. Line up BOTTOM of drill template with the top edge of the wear bar or wearbar bolt hole.
4. Line up SIDE B with the edge of your blade. See Page 3
5. Tape the template flush against the curved surface of the plow blade.
6. Mark holes that are indicated for drilling with a center punch. If no center punch is available cut out the holes and mark with a marker.
7. Drill holes using required drill bit.
DRILL
DRIVER SIDE
SIDE B
1"
FIGURE 1
DRILL
INSTRUCTIONS
1. Verify template is to scale by measuring above line is EXACTLY 1 INCH. (See Figure 1)
2. Cut out all dotted line areas on template. Cut very bottom if no wear bar is installed. Cut second line from bottom if wear bar is installed (wear bar must not be worn on surface template contacts)
3. Line up BOTTOM of drill template with the top edge of the wear bar or wearbar bolt hole.
4. Line up SIDE B with the edge of your blade. See Page 3
5. Tape the template flush against the curved surface of the plow blade.
6. Mark holes that are indicated for drilling with a center punch. If no center punch is available cut out the holes and mark with a marker.
7. Drill holes using required drill bit.
FRONT CURVED SURFACE
EDGE OF BLADE

Poly-Pro Tapered Shield

Plow Accessory PART #106110

Kit Components:		
Item #	Qty.	Description
1	1	Poly Plow Shield Driver Side
2	1	Pro Poly Wing Flap
3	1	HK-364
3.1	2	5/16”-18 x 1.00” Carriage Bolt
3.2	1	5/16”-18 x 1.25” Carriage Bolt
3.3	3	5/16”-18 x 1.00” Hex Flange Bolt
3.4	2	5/16”-18 x 1.75” Hex Flange Bolt (not used)
3.5	1	5/16”-18 x 2.00” Hex Flange Bolt (not used)
3.6	6	5/16”-18 Hex Flange Nylock Nut
3.7	2	5/16”-18 Serr Hex Flange Nut

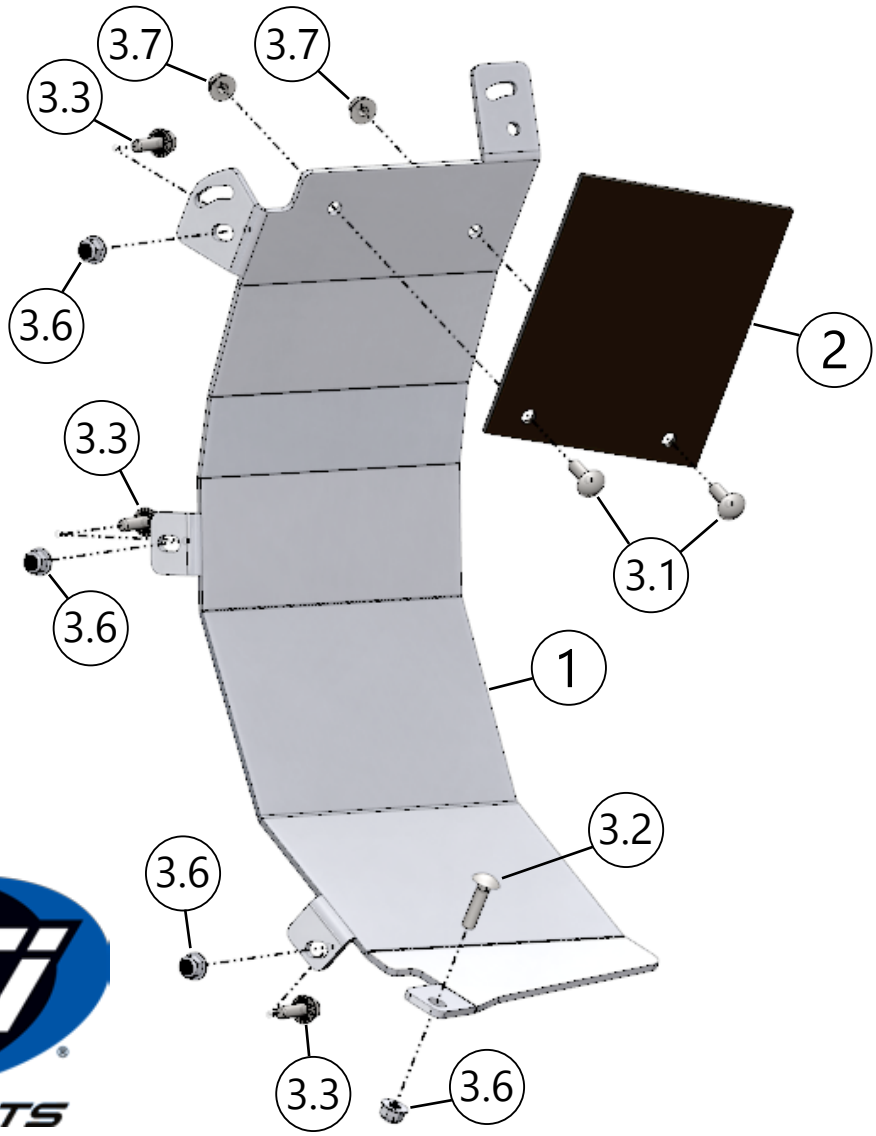

©2023 Copyright Kappers Fabricating, Inc. All rights reserved

INSTALLATION INSTRUCTIONS:

Note: Make sure all hardware needed to complete this mount is in the package. Thoroughly read through and understand the instructions before installing.

1. Remove and discard the outermost wear bar carriage bolt (A) on the driver side of the plow as shown in **Figure 1**.

2. Hold Side Shield (1) in place on driver side of the blade and secure using 5/16 bolts (3.3) and 5/16 nuts (3.6) as shown in **Figure 1 & 2**. ***Note:*** Do not tighten at this time.

3. Once Side Shield is in place, secure wear bar and side shield using the 5/16 bolt (3.2) and 5/16 nut (3.6) as shown in **Figure 3**.

4. If holes are not already in the flap, use the dimensions in Figure 5 to drill two holes in the wing flap (2) using a 3/8" drill bit.

5. Hold Wing Flap (2) in place and secure using 5/16 bolts (3.1) and 5/16 nuts (3.6) as shown in **Figure 4**.

6. Tighten all hardware evenly.

Figure 1

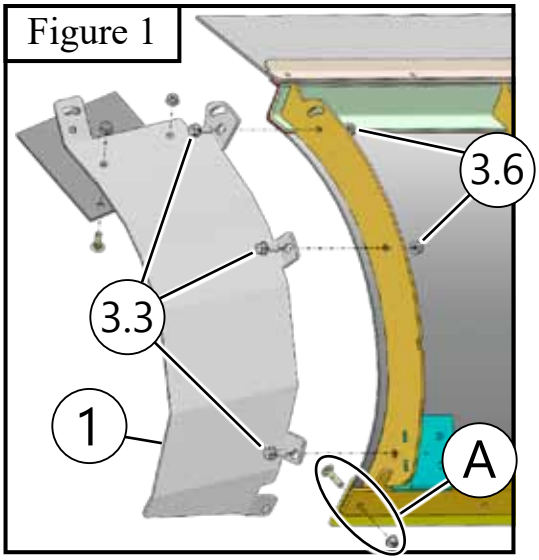

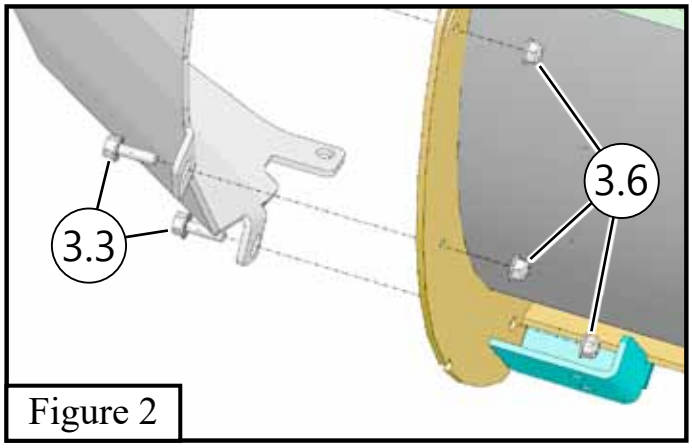

Figure 2

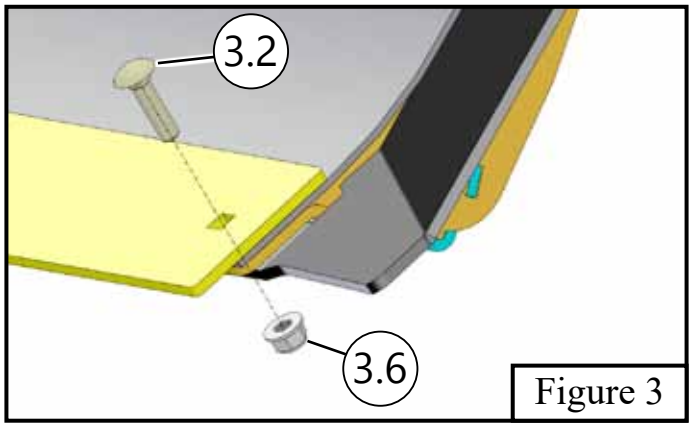

Figure 3

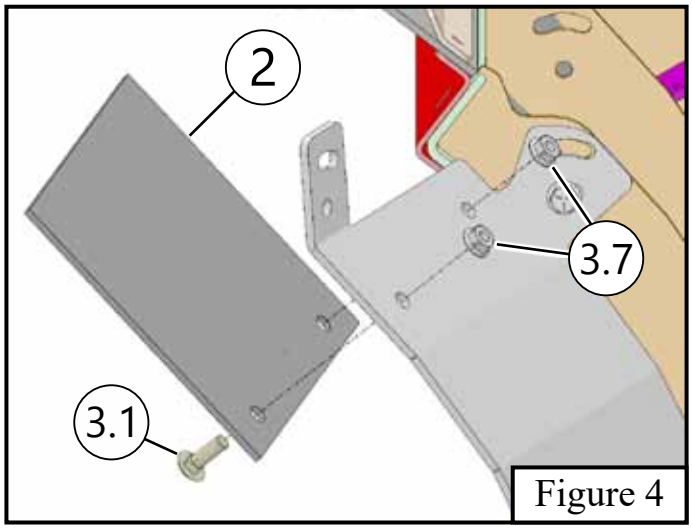

Figure 4

Figure 5

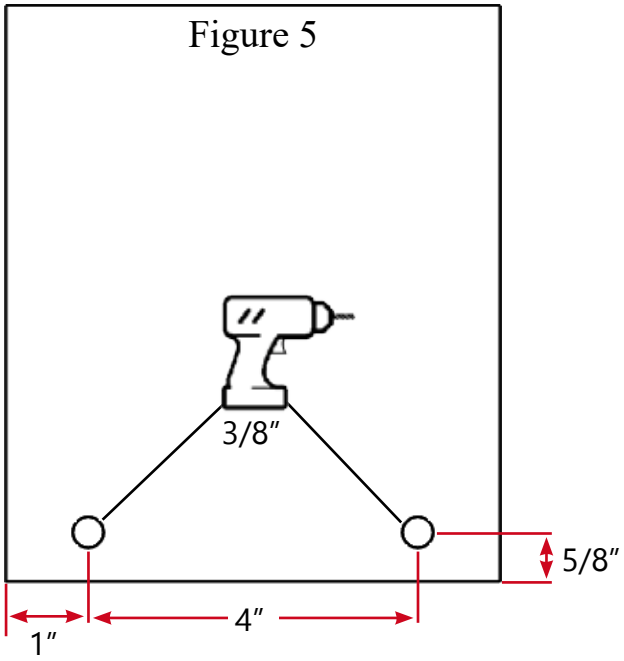

©2023 Copyright Kappers Fabricating, Inc. All rights reserved

Poly-Pro Tapered Shield

Plow Accessory PART #106115

Kit Components:		
Item #	Qty.	Description
1	1	Poly Plow Shield Passenger Side
2	1	Pro Poly Wing Flap
3	1	HK-364
3.1	2	5/16”-18 x 1.00” Carriage Bolt
3.2	1	5/16”-18 x 1.25” Carriage Bolt
3.3	3	5/16”-18 x 1.00” Hex Flange Bolt
3.4	2	5/16”-18 x 1.75” Hex Flange Bolt (not used)
3.5	1	5/16”-18 x 2.00” Hex Flange Bolt (not used)
3.6	6	5/16”-18 Hex Flange Nylock Nut
3.7	2	5/16”-18 Serr Hex Flange Nut

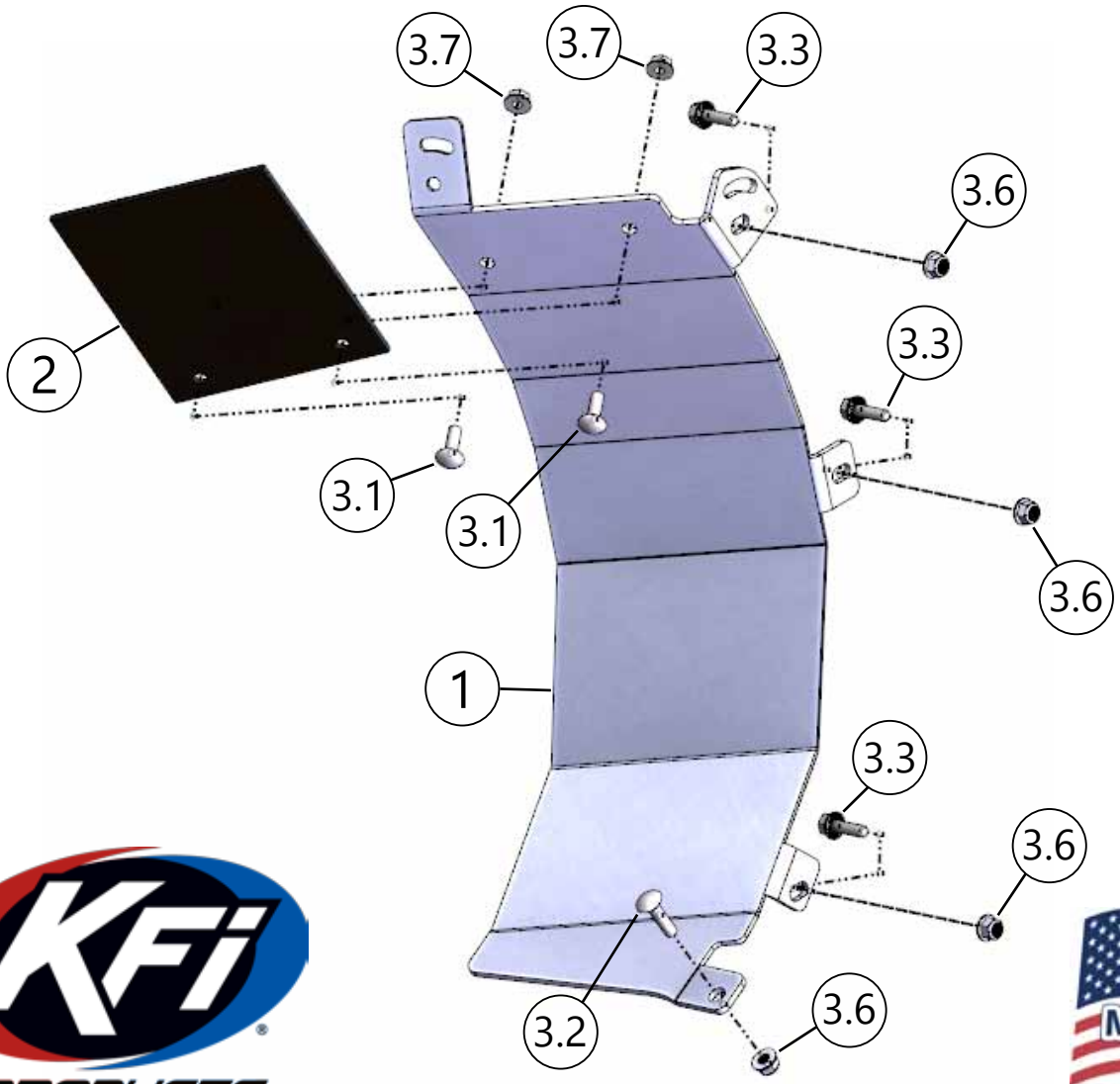

©2023 Copyright Kappers Fabricating, Inc. All rights reserved

INSTALLATION INSTRUCTIONS:

Note: Make sure all hardware needed to complete this mount is in the package. Thoroughly read through and understand the instructions before installing.

1. Remove and discard the outermost wear bar carriage bolt (A) on the passenger side of the plow as shown in **Figure 1**.

2. Hold Side Shield (1) in place on passenger side of the blade and secure using 5/16 bolts (3.3) and 5/16 nuts (3.6) as shown in **Figure 1 & 2**. ***Note:*** Do not tighten at this time.

3. Once Side Shield is in place, secure wear bar and side shield using the 5/16 bolt (3.2) and 5/16 nut (3.6) as shown in **Figure 3**.

4. If holes are not already in the flap, use the dimensions in Figure 5 to drill two holes in the wing flap (2) using a 3/8" drill bit.

5. Hold Wing Flap (2) in place and secure using 5/16 bolts (3.1) and 5/16 nuts (3.6) as shown in **Figure 4**.

6. Tighten all hardware evenly.

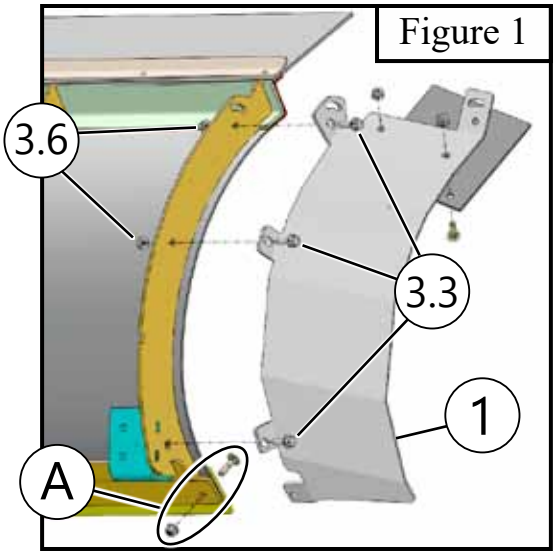

Figure 1

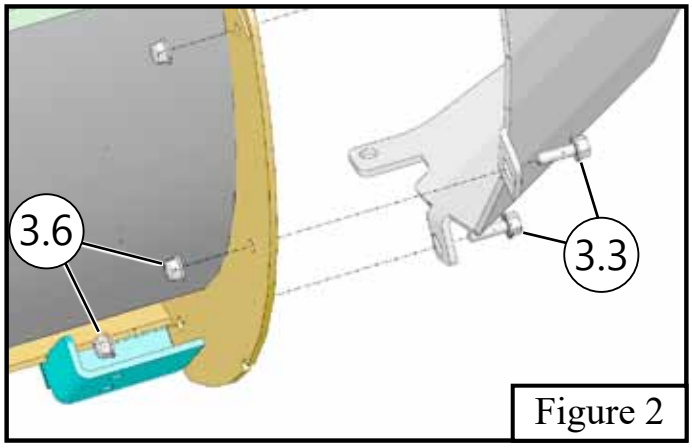

Figure 2

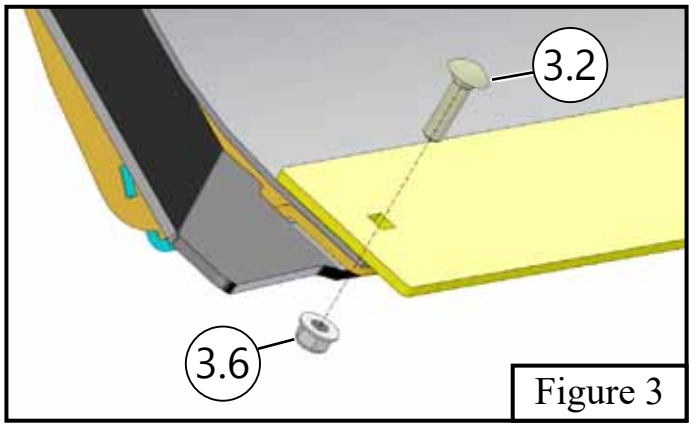

Figure 3

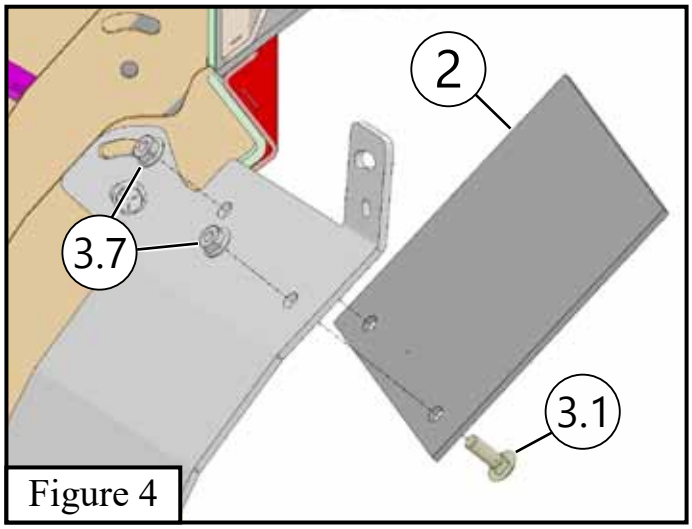

Figure 4

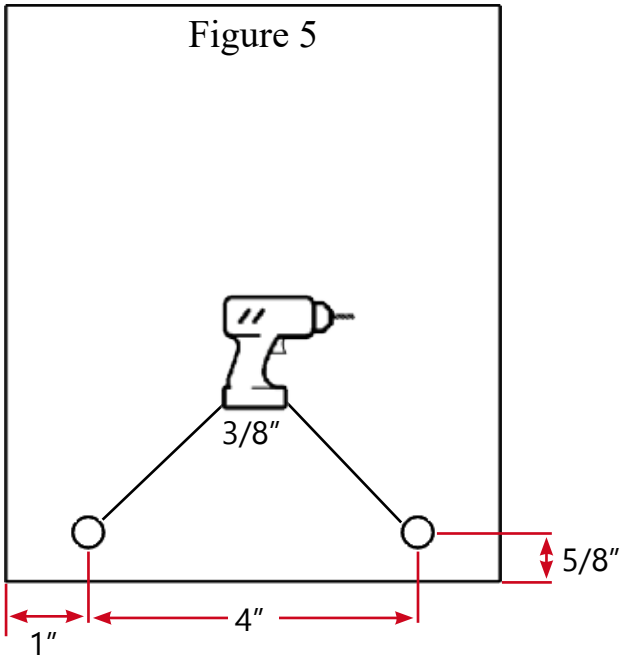

Figure 5

©2023 Copyright Kappers Fabricating, Inc. All rights reserved

NEGATIVE -1” SQ TUBE LEVELING KIT

Plow Accessory PART #106320

Kit Components:		
Item #	Qty.	Description
1	2	-1” PIN ATTATCHMENT BRACKET
2	1	HARDWARE KIT (HK-398)
2.1	6	3/8”-16 X 1.25 HEX BOLT FLANGE
2.2	6	3/8”-16 HEX NUT FLANGE NYLOCK

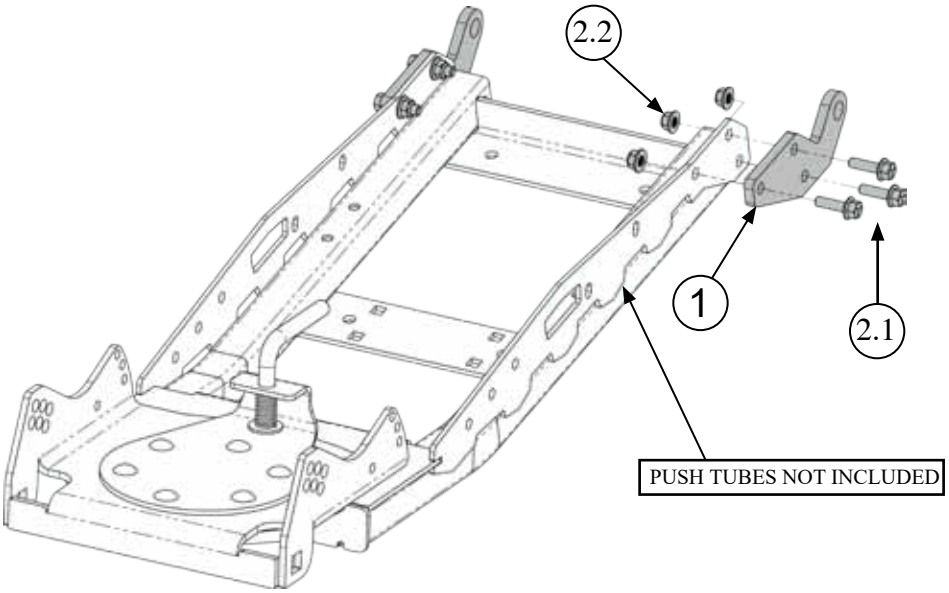

INSTALLATION INSTRUCTIONS

1. Remove current standard attachment brackets and discard hardware
2. Fasten the pin attachment brackets (1) to the push tubes using bolts (2.1) and nuts (2.2) as shown in image above.
3. Torque 3/8” bolts to 31lb-ft

©2022 Copyright Kappers Fabricating, Inc. All rights reserved

1”- 2” SQ PUSH TUBE LEVELING KIT

Plow Accessory PART #106322

Kit Components:		
Item #	Qty.	Description
1	2	Leveling Tab
2	1	Hardware Kit (HK-398)
2.1	6	3/8”-16 x 1.25 Hex Flange Bolt
2.2	6	3/8”-16 Hex Flange Nylock Nut

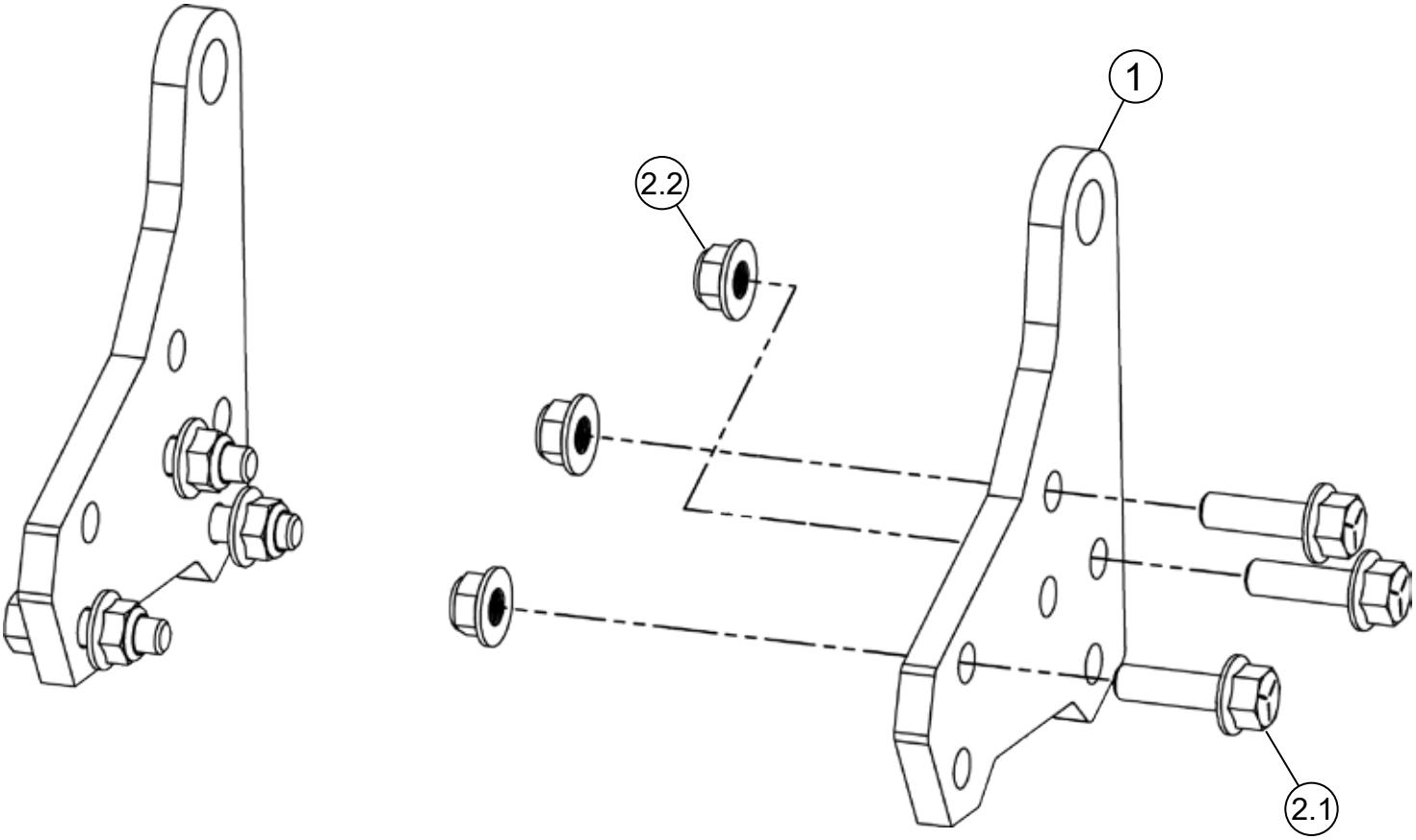

©2022 Copyright Kappers Fabricating, Inc. All rights reserved

INSTALLATION INSTRUCTIONS

Note: Make sure all hardware needed to complete this mount is in the package. Thoroughly read through and understand the instructions before installing.

Note: If standard pin attachment brackets have not yet been installed, skip to step 2.

Note: The ideal pin height is 10.875”. Use leveling kit configuration accordingly. (see figure 4) Be sure suspension is settled before measuring on flat level ground.

1. Remove and discard the existing standard pin attachment brackets (A) and hardware (B) as shown in **Figure 1**.

2. Set leveling tab (1) in place and secure using bolts (2.1) and nuts (2.2) as shown in **Figures 2 & 3**.

3. For the 1” leveling height configuration, see **Figure 2**. For the 2” leveling height configuration, see **Figure 3**.

4. Torque all hardware to **31 lb-ft**.

Figure 1

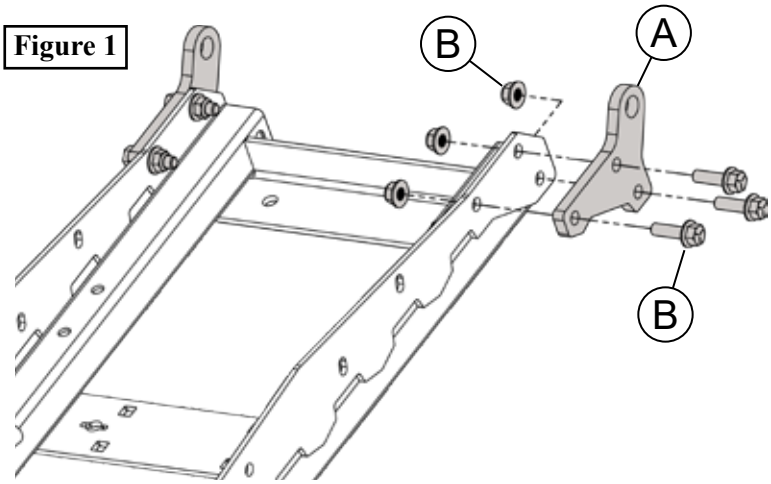

Figure 2

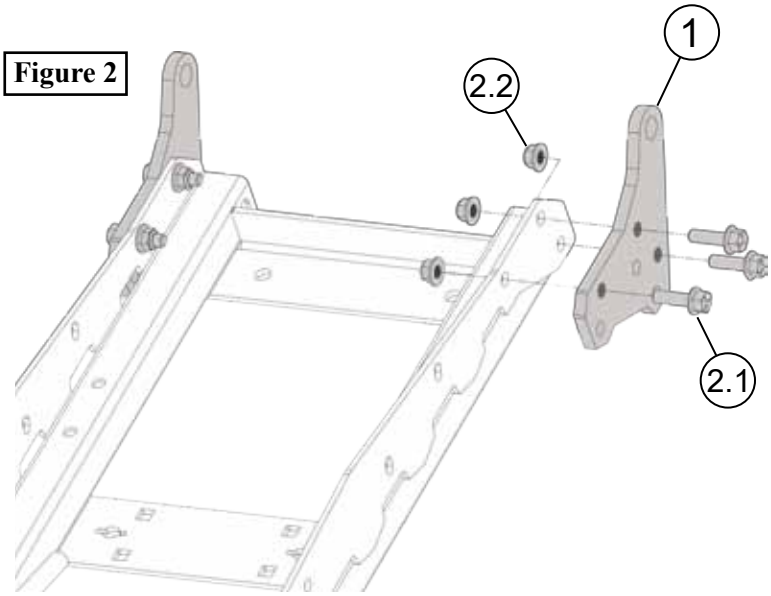

Figure 3

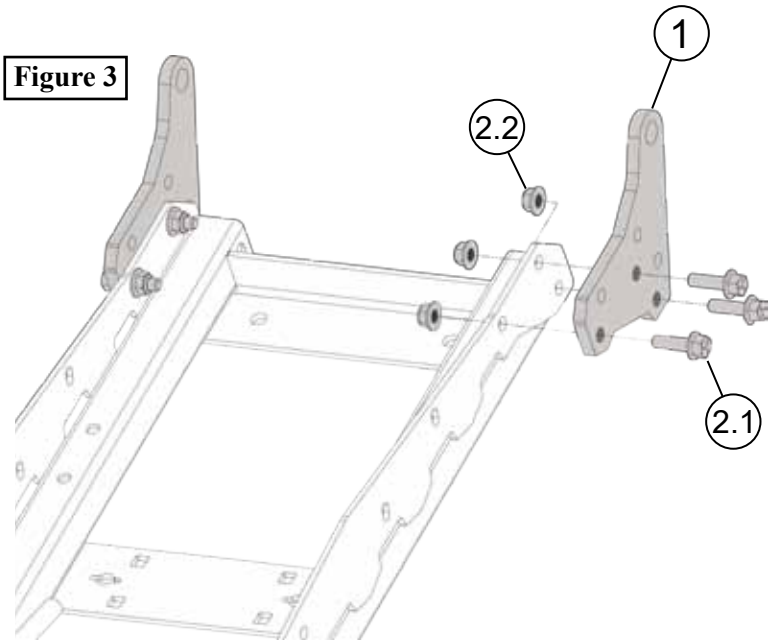

Figure 4

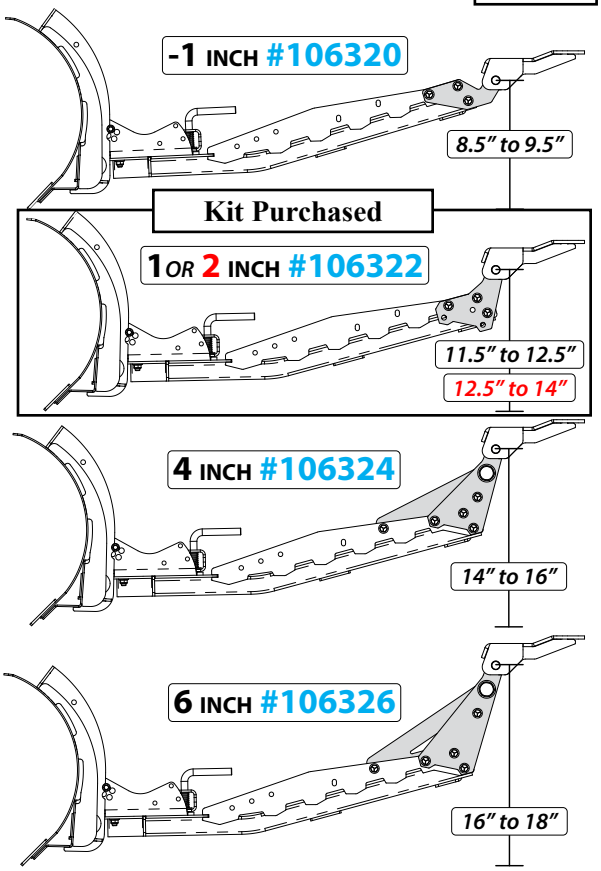

©2022 Copyright Kappers Fabricating, Inc. All rights reserved

PRO 2.0 - 4 INCH LEVELING KIT

Plow Accessory PART #106324 Rev C

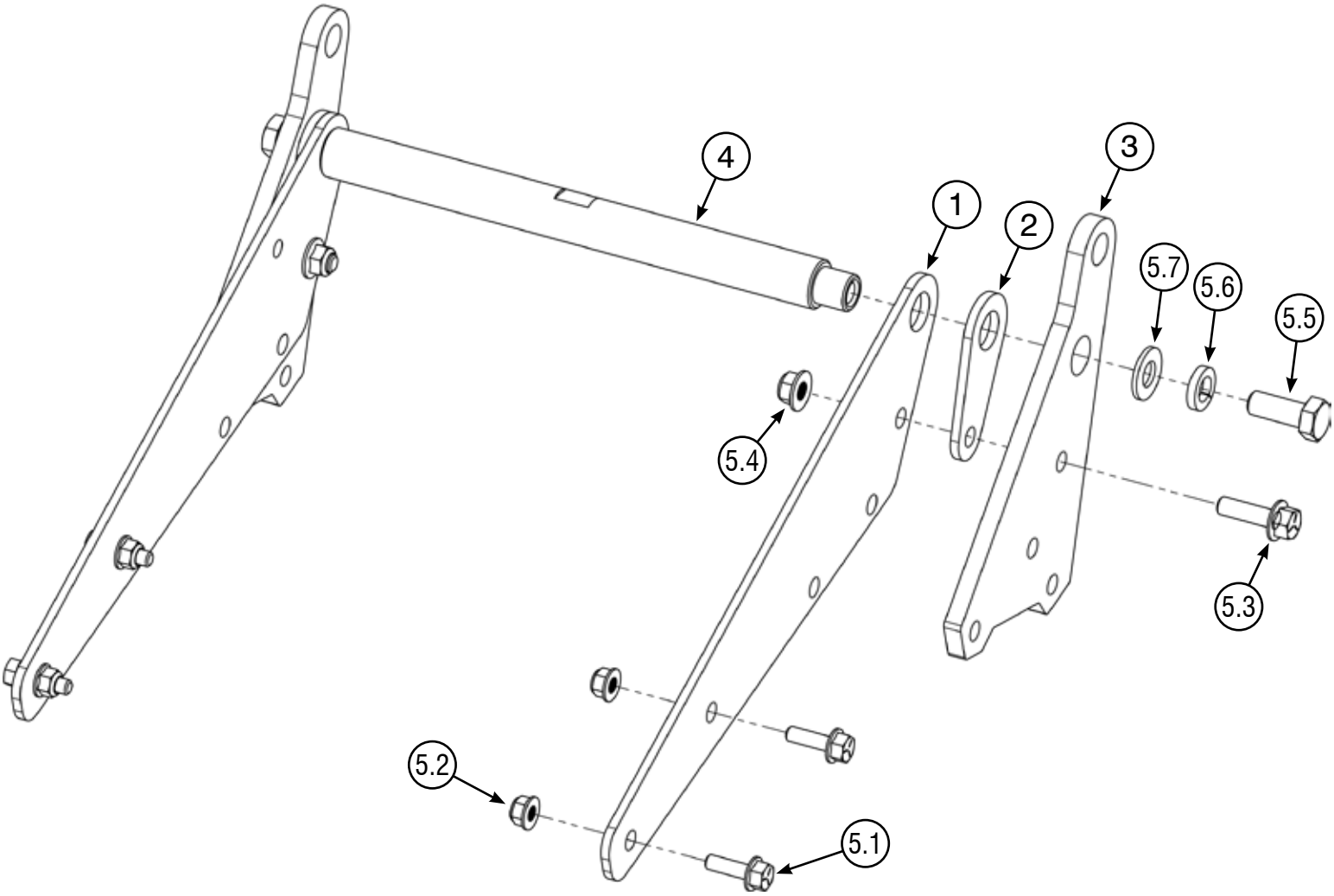

Kit Components:					
Item #	**Qty.**	**Description**	**Item #**	**Qty.**	**Description**
1	2	4” Gusset Plate (106434)	5.2	4	5/16”-18 Hex Flange Nylock Nut
2	2	Level Kit Spacer (106329)	5.3	2	3/8”-16 x 1.25” Hex Bolt Flange
3	2	4” Level Ear (106318)	5.4	2	3/8”-16 Hex Flange Nylock Nut
4	1	Level Kit Rod (106399)	5.5	2	1/2”-13 X 1.25” Hex Bolt
5	1	Hardware Kit (HK-446)	5.6	2	1/2” Lock Washer
5.1	4	5/16”-18 X 1.00” Hex Bolt Flange	5.7	2	1/2” Flat Washer

©2025 Copyright Kappers Fabricating, Inc. All rights reserved

06/17/25

INSTALLATION INSTRUCTIONS

Notice

Torque bolts to ANSI Specs (or OEM specs if applicable), unless otherwise stated. After the first use and at the start of each season, check torque.

Note: Make sure all hardware needed to complete this mount is in the package. Thoroughly read through and understand the instructions before installing.

Installation Instructions

1. If installed, remove pin attachment brackets (C) and hardware (A and B) as shown in **Figure 1**. If not installed, proceed to **Step 2**.

   Note: Save hardware (A and B) for reuse in Step 5.

2. Loosely assemble gusset (1), spacer (2), and ear (3) onto rod (4) using bolts (5.5), lock washers (5.6), and flat washers (5.7). Refer to **Figure 2** for orientation.

3. Loosely install bolts (5.3) and lock nuts (5.4) through the ear (3), spacer (2), and gusset (1). See **Figure 2**.

4. Place the subassembly onto the push tube. Ensure gusset (1) is placed inside the rib on the push tube. Loosely install front bolts (5.1) and lock nuts (5.2) as shown in **Figure 3**.

5. Reinstall bolts (A) and nuts (B) removed in **Step 1** into their original positions. See **Figure 4**.

6. Once all hardware is started, tighten all hardware evenly. See **Figure 5**.

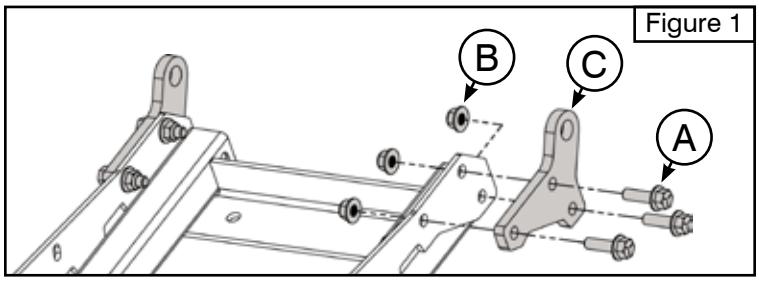

Figure 1

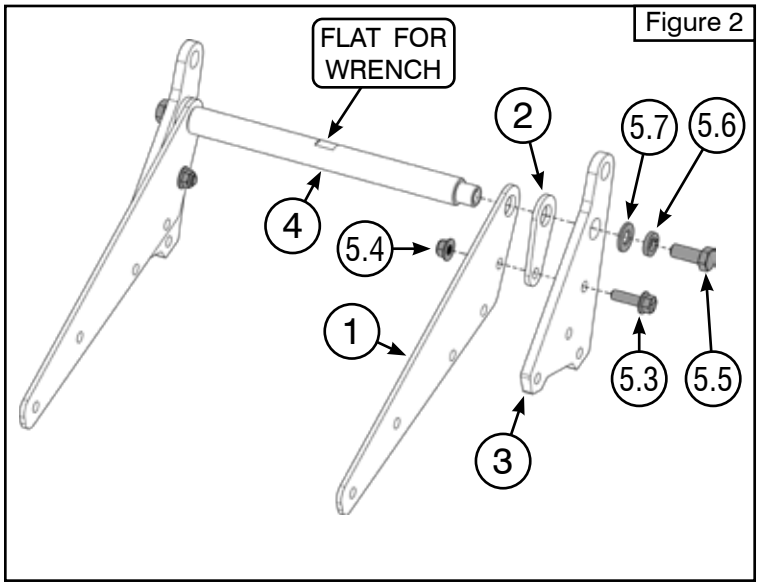

Figure 2

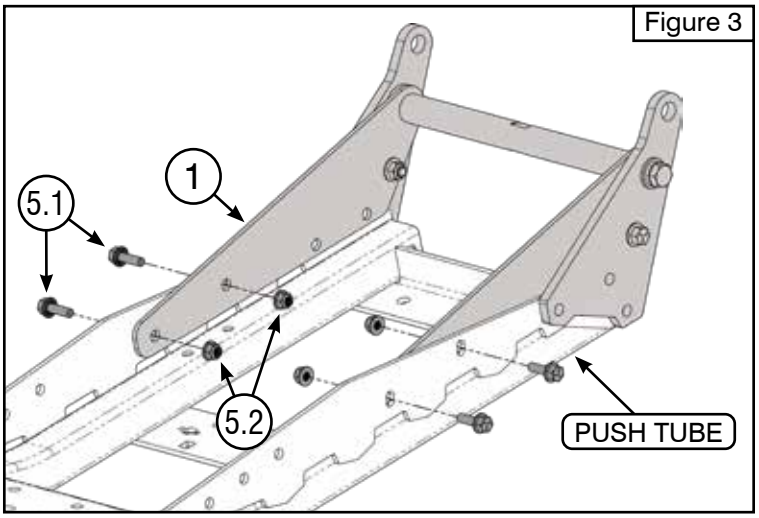

Figure 3

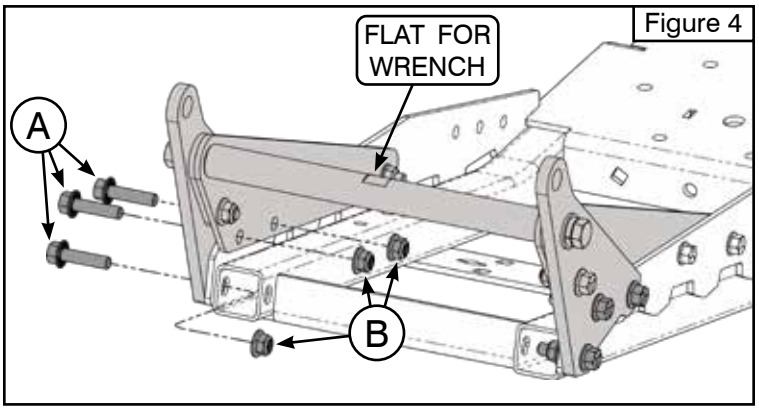

Figure 4

Note: When tightening bolts (5.5), use a 7/8" wrench or an adjustable wrench on the flat spot of rod (4) to prevent it from rotating. See **Figures 2 and 4.**

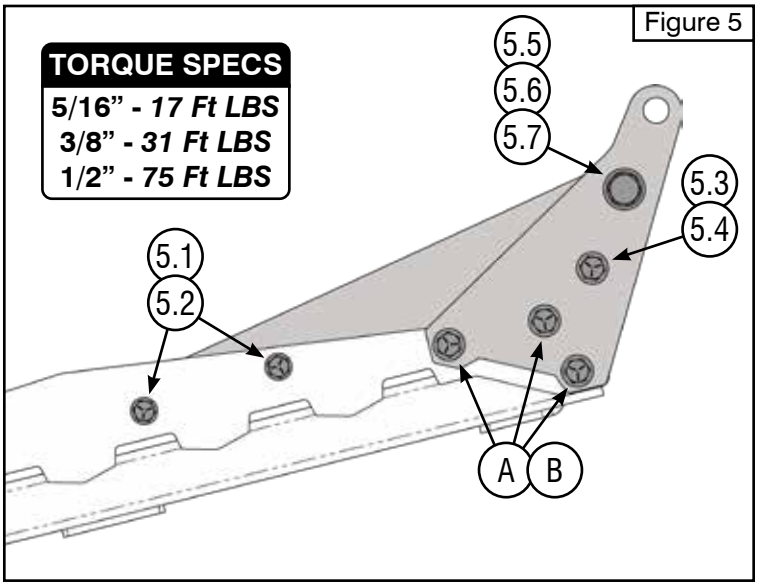

Figure 5

©2025 Copyright Kappers Fabricating, Inc. All rights reserved

PRO 2.0 - 6 INCH LEVELING KIT

Plow Accessory PART #106326 Rev C

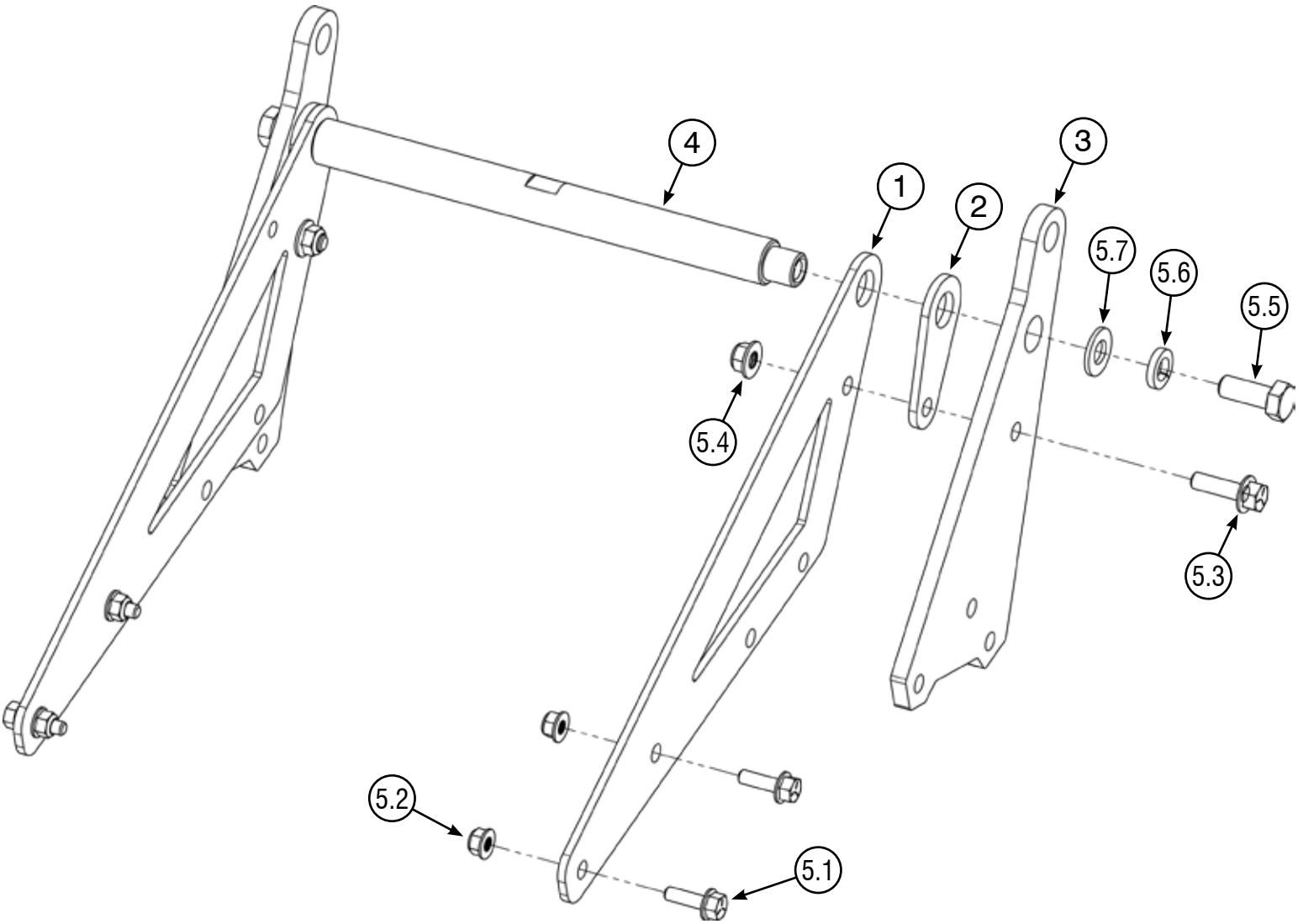

Kit Components:

Item #	Qty.	Description	Item #	Qty.	Description
1	2	6” Gusset Plate (106448)	5.2	4	5/16”-18 Hex Flange Nylock Nut
2	2	Level Kit Spacer (106329)	5.3	2	3/8”-16 x 1.25” Hex Bolt Flange
3	2	6” Level Ear (106328)	5.4	2	3/8”-16 Hex Flange Nylock Nut
4	1	Level Kit Rod (106399)	5.5	2	1/2”-13 X 1.25” Hex Bolt
5	1	Hardware Kit (HK-446)	5.6	2	1/2” Lock Washer
5.1	4	5/16”-18 X 1.00” Hex Bolt Flange	5.7	2	1/2” Flat Washer

©2025 Copyright Kappers Fabricating, Inc. All rights reserved

12/24/25

INSTALLATION INSTRUCTIONS

Notice

Torque bolts to ANSI Specs (or OEM specs if applicable), unless otherwise stated. After the first use and at the start of each season, check torque.

Note: Make sure all hardware needed to complete this mount is in the package. Thoroughly read through and understand the instructions before installing.

Installation Instructions

1. If installed, remove pin attachment brackets (C) and hardware (A and B) as shown in **Figure 1**. If not installed, proceed to **Step 2**.

   Note: Save hardware (A and B) for reuse in Step 5.

2. Loosely assemble gusset (1), spacer (2), and ear (3) onto rod (4) using bolts (5.5), lock washers (5.6), and flat washers (5.7). Refer to **Figure 2** for orientation.

3. Loosely install bolts (5.3) and lock nuts (5.4) through the ear (3), spacer (2), and gusset (1). See **Figure 2**.

4. Place the subassembly onto the push tube. Ensure gusset (1) is placed inside the rib on the push tube. Loosely install front bolts (5.1) and lock nuts (5.2) as shown in **Figure 3**.

5. Reinstall bolts (A) and nuts (B) removed in **Step 1** into their original positions. See **Figure 4**.

6. Once all hardware is started, tighten all hardware evenly. See **Figure 5**.

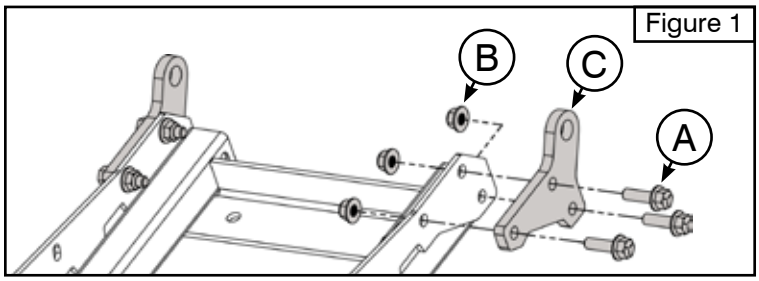

Figure 1

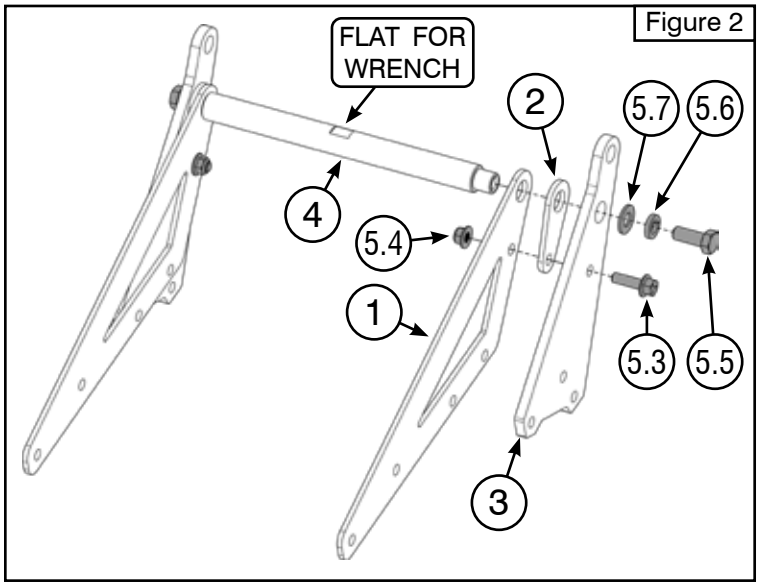

Figure 2

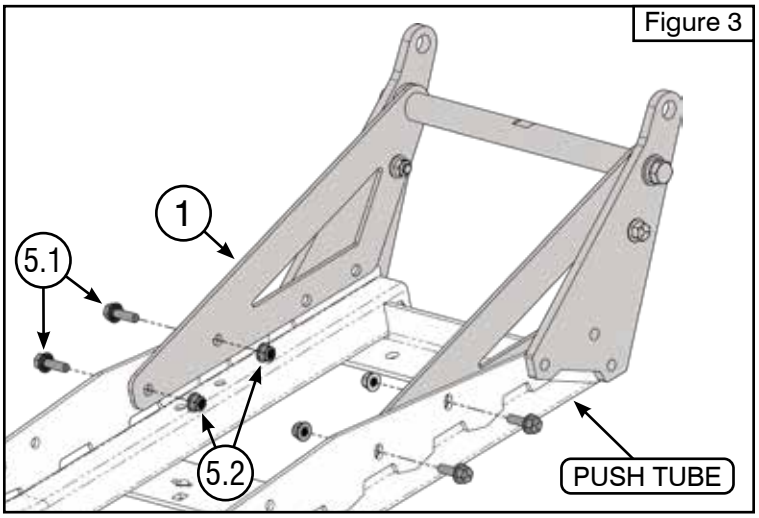

Figure 3

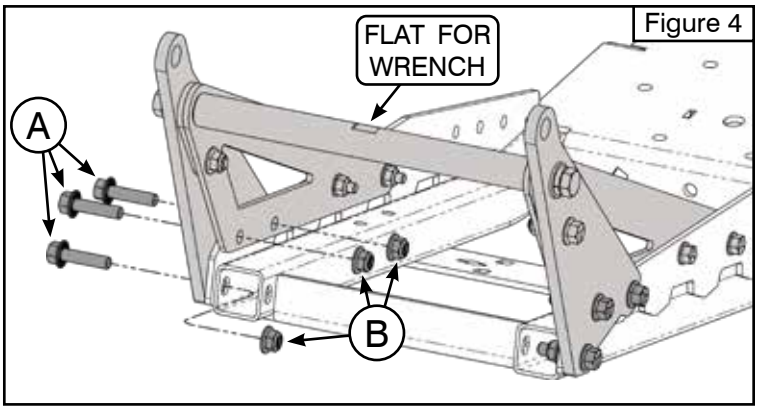

Figure 4

Note: When tightening bolts (5.5), use a 7/8" wrench or an adjustable wrench on the flat spot of rod (4) to prevent it from rotating. See **Figures 2 and 4.**

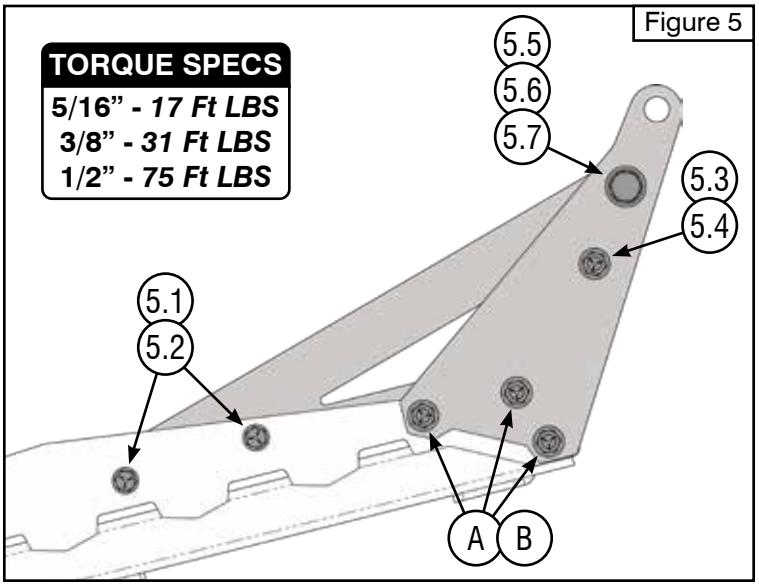

Figure 5

©2025 Copyright Kappers Fabricating, Inc. All rights reserved