PRO-V PLOW SYSTEM

V-Plow **PART #106180 Rev B.3**

©2026 Copyright Kappers Fabricating, Inc. All rights reserved

02/11/26

Important Safety Information

Manual Conventions

This manual uses the following symbols to help differentiate between different kinds of information. The safety symbol is used with a key word to alert you to potential hazards in operating and owning a plow.

Follow all safety messages to avoid or reduce the risk of serious injury or death.

⚠ DANGER

DANGER indicates an imminently hazardous situation which, if not avoided, will result in death or serious injury.

⚠ CAUTION

CAUTION indicates a potentially hazardous situation which, if not avoided, may result in minor or moderate injury.

⚠ WARNING

WARNING indicates a potentially hazardous situation which, if not avoided, could result in death or serious injury.

CAUTION

CAUTION used without the safety alert symbol indicates a potentially hazardous situation which, if not avoided, may result in property damage.

To help you make informed decisions regarding safety, we have included instructions and information on labels. This information is provided with the intent to help avoid potential hazards that may harm you or others. It is, in no way, possible for us to inform you of every hazard you may come across with this product.

NOTE

If you have questions regarding your plow,
we can help. Please call our help line at
1-877-346-2050.

Safety Rules

⚠ WARNING

- Read this manual thoroughly before operating your plow. Failure to follow instructions could result in serious injury or death.
- Do not exceed 5 mph, even with blade raised.
- Make sure that all nuts and bolts are tightened per installation instructions.
- Never operate this KFI product with missing or damaged parts.
- Drive slowly over bumpy and rough terrain, driving fast could cause damage to winch or plow.
- Never raise the plow above point of contact as it could cause damage to machine or winch (if applicable).
- Always perform regular inspections and maintenance on plow tubes and hardware before use.
- Operate with extreme caution on slopes, steep grades, and rough terrain.
- Be aware of any possible hidden objects under the snow.
- Do not ram the blade into the pile.

⚠ CAUTION

- Take care when installing PLOW SPRINGS as they will be under tension.
- Use care when lifting components into place.

⚠ DANGER

Never stand or ride on the plow.

©2026 Copyright Kappers Fabricating, Inc. All rights reserved

Important Information Before Assembly

This plow system is adjustable for different machine heights. This allows the blade to operate in the V-Position, and the Scoop Position without the blade tips digging into the ground. This manual will use your machine during the assembly process to ensure its at the correct height. This will need to be done on a level surface for proper results. The blade can be adjusted at a later date if you modify your machine or your plow foot height. A leveling kit can be purchased for extreme cases. Height adjustment information can be found on Page 9 for clarity.

Install your winch mount and plow mount, if needed, before assembling the blade.

If your V-Plow has Hydraulic Actuators, you can choose to install the wire harness ahead of time. The V-Plow Wire Harness Manual from Box 4, (M106180-HAR) can be used for that installation. If you purchased the V-Plow Hand Remote, this will operate the winch, so having the winch pre-installed will help in that connection process.

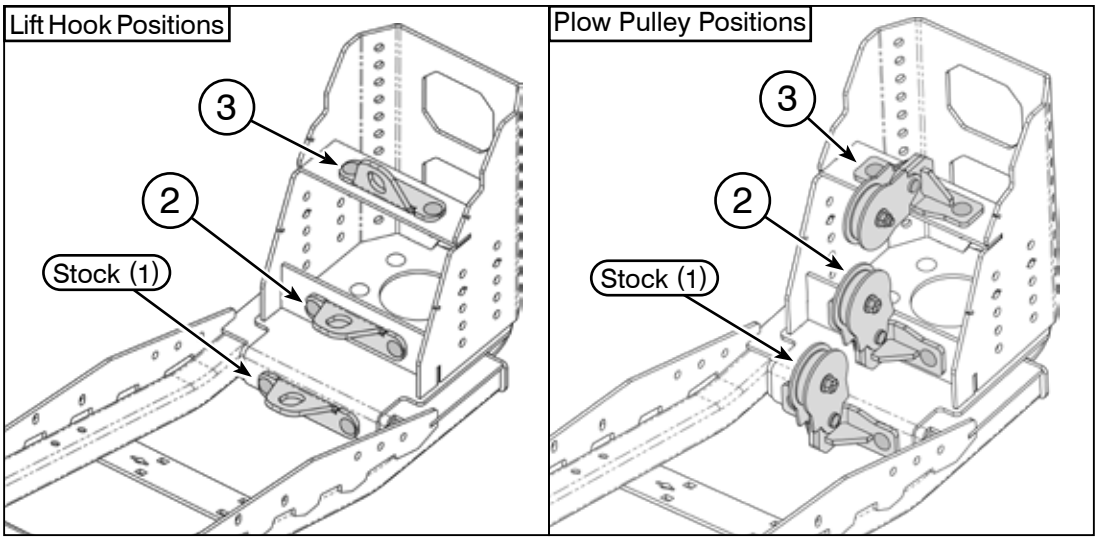

The lift hook or plow pulley has different attachment points that are available. The manual will have you install the lift hook in the 'stock' position. If your cable angle requires a different position, the images above show the available options. The stock position will be used in most cases.

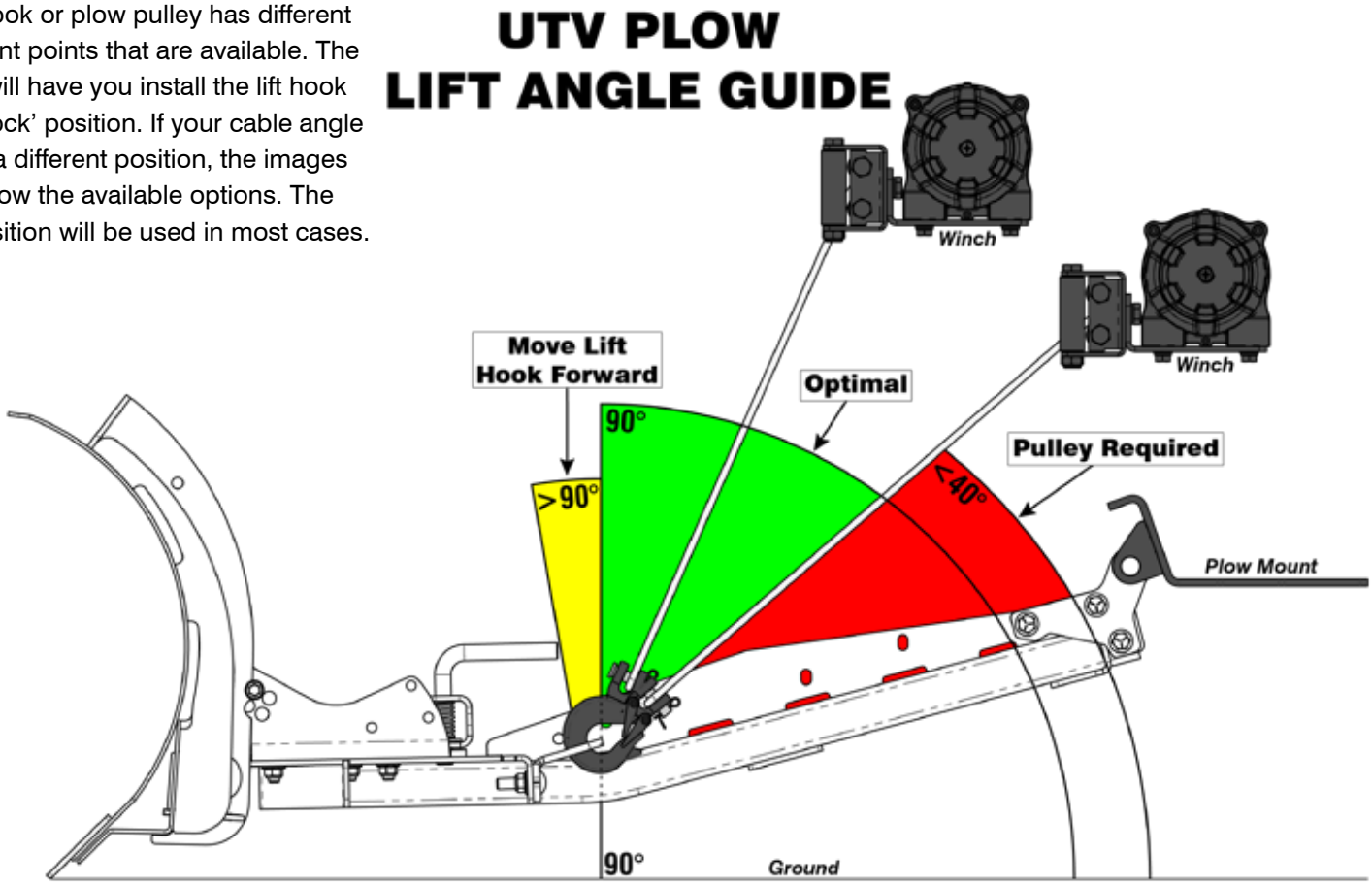

©2026 Copyright Kappers Fabricating, Inc. All rights reserved

Components

Note: Make sure all hardware needed to complete this assembly is in the package. Thoroughly read through and understand the instructions before assembly.

Kit Components:

Item #	Part #	Description	Qty.
Box 1	106180-DS		1
1	106180-DS	Driver Side Wing Assembly	1
Box 2	106180-PS		1
2	106180-PS	Passenger Side Wing Assembly	1
Box 3	106180-CP		1
3	106517	V-Plow Push Tube Center Pivot	1
4	106516	V-Plow Blade Center Pivot	1
5	106061	V-Plow Pivot Pin	1
6	106507	Driver Side Wing Actuator Bracket	1
7	106506	Passenger Side Wing Actuator Bracket	1
8	106153	V-Plow Bulkhead Actuator Bracket	2
9	106088	V-Plow Flap	2
10	106087	V-Plow Flap Trim	4
11	105170	Plow Skid Kit - Straight - 2pc (Manual Included)	1
12	106505	Pro-Poly Premium Plow Marker	1
13	HK-102	Hardware Kit HK-102	1
13.1	CB-5Z-025-20-100	1/4”-20 X 1.00” Carriage Bolt GR5	9
13.2	FW-SAE-Z-025	1/4” Flat Washer	9
13.3	HNN-5Z-025-20	1/4”-20 Hex Nut Nylock GR5	9
14	HK-430	Hardware Kit HK-430	1
14.1	CB-5Z-038-16-100	3/8”-16 X 1.00” Carriage Bolt GR5	22
14.2	CB-5Z-038-16-150	3/8”-16 X 1.50” Carriage Bolt GR5	2
14.3	HNFN-5Z-038-16	3/8”-16 Hex Nut Flange Nylock GR5	28
14.4	P890033	5/16”-18 X .75” Carriage Bolt GR5	1
14.5	P890014	5/16”-18 Hex Nut Flange Nylock GR5	1
14.6	P800558	5/8” Hitch Pin	2
14.7	P800559	Bridge Pin Clip (Used With 5/8” Pin)	2
14.8	HBF-5Z-038-16-100	3/8”-16 X 1.00” Flange Bolt GR5	4
Box 4	106180-(MP/AP/APH)	106180-AP/APH will have an additional manual for installing the wiring harness	1
15	106301	Push Tube Weldment	1
16	106302	UTV Push Tube Ear	2
17	105138	UTV Lift Hook	1
18	105490	Single Plow Foot Kit	1
19	HK-398	Hardware Kit HK-398	1
19.1	HBF-5Z-038-16-125	3/8”-16 X 1.25” Hex Bolt Flange GR5 Serrated	6
19.2	HNFN-5Z-038-16	3/8”-16 Hex Nut Flange Nylock GR5	6
20	M106180	Plow System Assembly Instructions	1

©2026 Copyright Kappers Fabricating, Inc. All rights reserved

Components

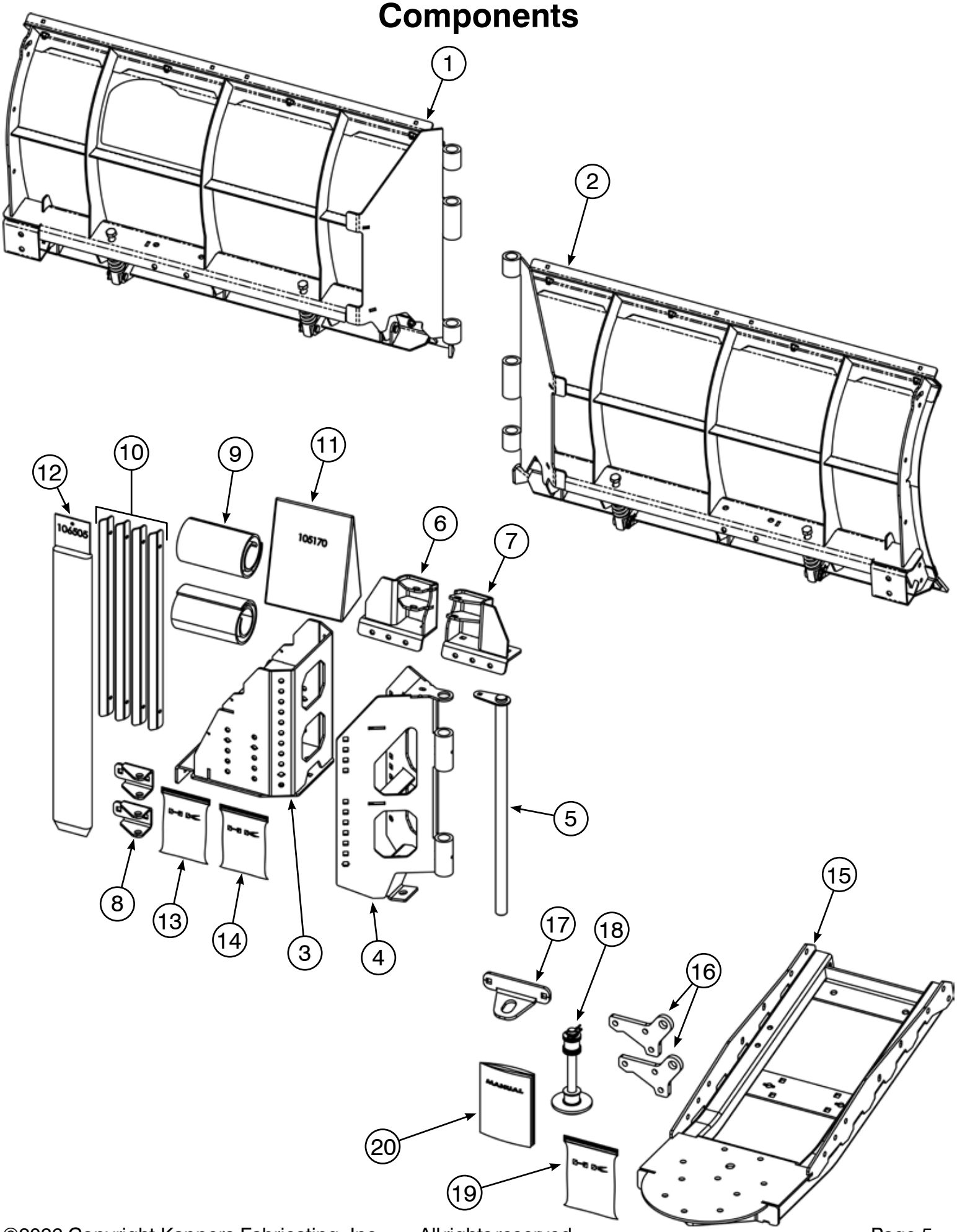

©2026 Copyright Kappers Fabricating, Inc. All rights reserved

INSTALLATION INSTRUCTIONS

Notice

Torque bolts to ANSI specifications. After the initial use, at the beginning of each season, and following any accidental impacts, recheck the torque.

1. Make sure this plow system is assembled on a large, level surface to ensure proper set-up.

2. From Box 4, assemble the Push Tube Ears (16) to the Push Tube Weldment (15) with HK-398 as shown in **Figure 1**. *If your machine requires a leveling kit, or you purchased a Glacier Mount, refer to that installation manual at this point, then continue below.*

3. If installing on a Machine with Tracks, continue below. Otherwise, skip to **Step 4**.

   - The V-Plow Track Extension (106280) is required if you plow with tracks installed on your machine. For ease of installation, install the track extension now. *Refer to **Step 3, Figure 3** of the 106280 installation manual. After completing that manual, resume this manual from **Step 6**.*

4. Install the Push Tube Center Pivot (3) onto the front of the Push Tubes Weldment (15) and secure with 6 Bolts and Nuts (14.1 & 14.3). See **Figure 2**.

5. Attach Lift Hook (17) with Carriage Bolts (14.2) and Nuts (14.3) through the Center Pivot (3) and Push Tube Weldment (15). Tighten all hardware evenly. See **Figure 2**.

6. *Set Push Tube Assembly aside for a later step.*

7. Un-box 106180-DS (1) and 106180-PS (2) and place Driver and Passenger Wing next to each other. Insert Blade Center Pivot (4) into the gaps of the wings. See **Figure 3**. After lubricating the Center Pivot Pin (5), Slide the Center Pivot Pin (5) through all components. Secure the Center Pivot Pin (5) with Carriage Bolt (14.4) and Nut (14.5) through the top flange of the Pivot Pin and Center Piece as shown in **Figure 3**. *Lubricate this pin occasionally throughout the season, and at the start and end of each season.*

8. Attach the front Actuator Brackets (6 & 7) using 4 Bolts (14.1 and 14.8) and 4 Nuts (14.3). See **Figure 4 on next page**. *(Driver side is mirrored from **Figure 4** and uses Actuator Bracket 7)*

Figure 1

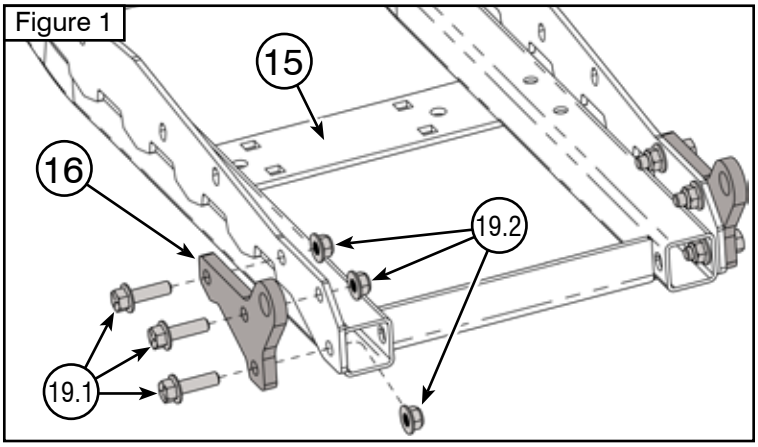

Figure 2

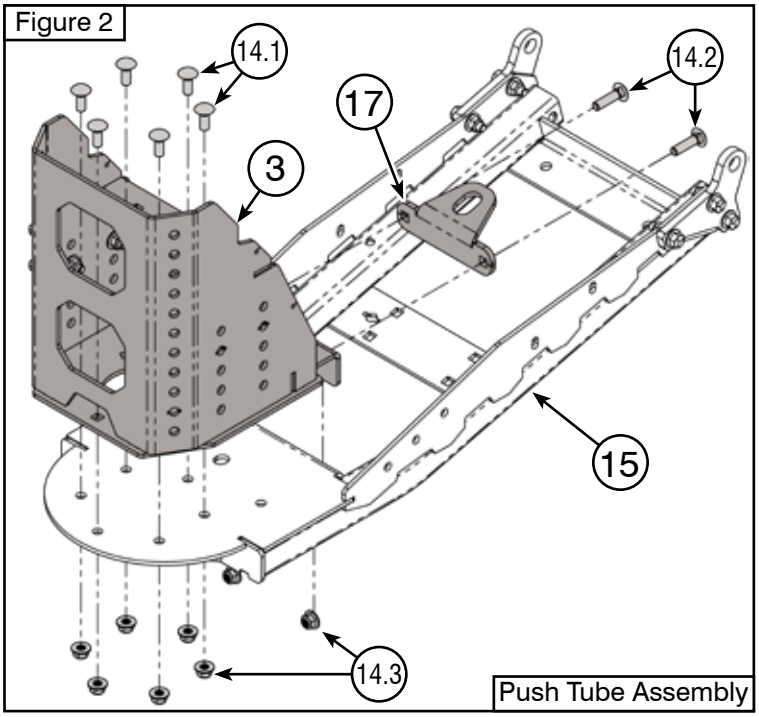

Figure 3

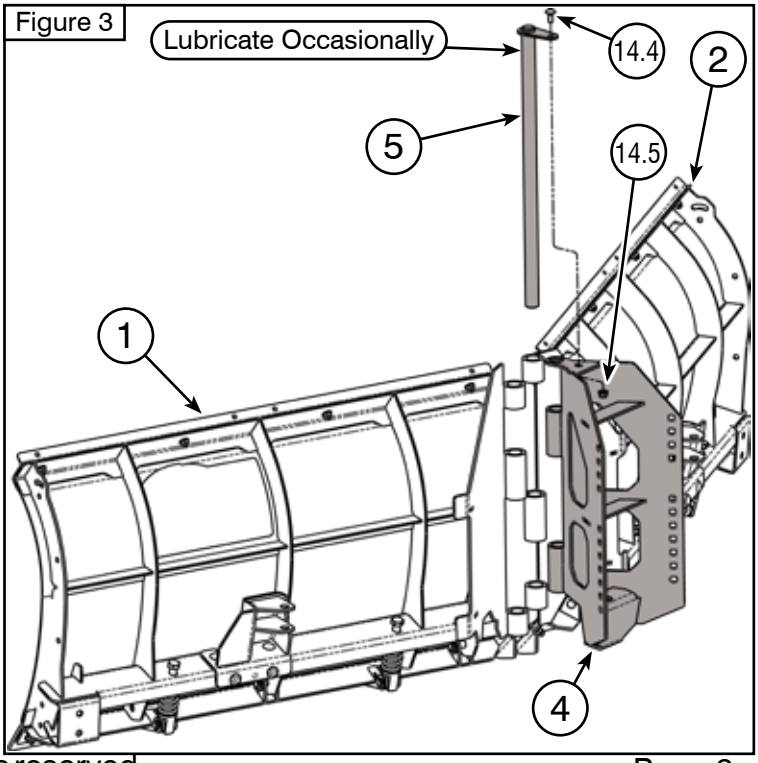

©2026 Copyright Kappers Fabricating, Inc. All rights reserved

9. The Top Flap (9) can be installed to each wing using two Trim Pieces (10) and Hardware (13.1-13.3) as shown in **Figure 4**. *Note top flap recommended orientation.*

10. Plow Markers (12) can be installed to each wing as shown in **Figure 4**. *Hardware included in plow marker package.* (Driver Side Mirrored)

11. Install Plow Feet (11 & 18) as needed. *See **Page 4-5** to identify Plow Feet (11)*

    - Plow feet can be configured in various positions: high to allow the wear bar to scrape the ground, flush with the wear bar (shown in **Figure 5**), or low to keep the wear bar off the ground. Decide on the configuration now for proper blade alignment on the machine.
    - Wing Plow Feet (11) come inside the box labeled "105170" (*inside **Box 3***). A manual is included. See that manual for bracket attachment. The height of these feet must match the center foot.

Figure 5

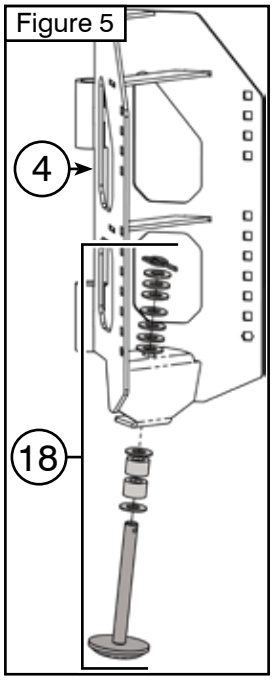

12. Attach the Push Tube Assembly to your plow mount with 5/8" Hitch Pins (14.6) and Bridge Pin Clips (14.7). Connect your winch hook to the Lift Bracket (17) on the push tubes. See **Figure 6**. *If you have a Glacier Mount, attach that appropriately.*

13. With the blade assembly in the scoop formation (shown in **Figures 3 & 7**), drive your machine forward so the push tubes are close to the rear of the blade assembly as shown in **Figure 7**.

14. Place a level on the Push Tube Center Pivot (3) and raise or lower the winch until it is level as shown in **Figure 7**. Pull ahead until the Push Tube Center Pivot (3) and Blade Center Pivot (4) are touching. ***See note under Figure 7.***

Figure 4

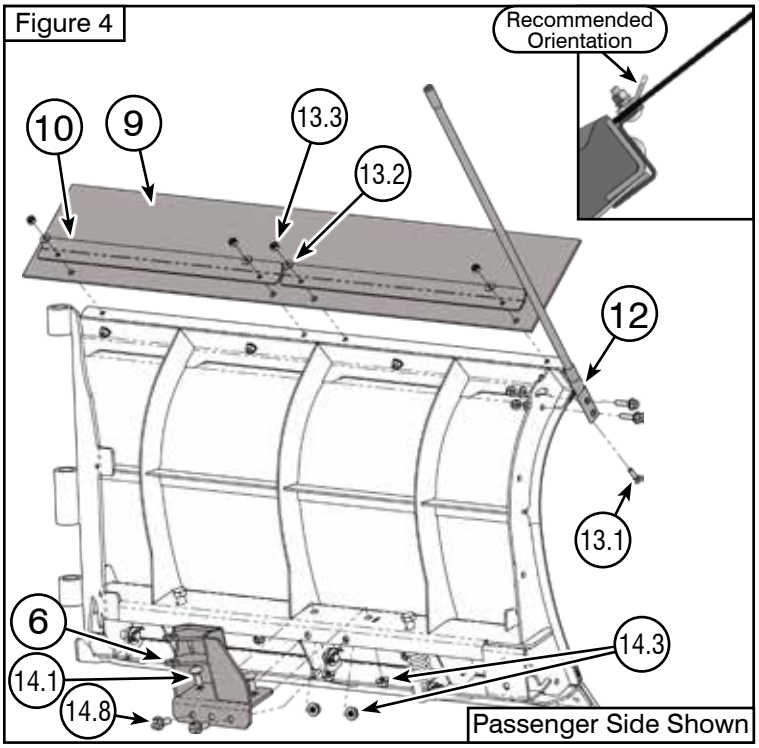

Figure 6

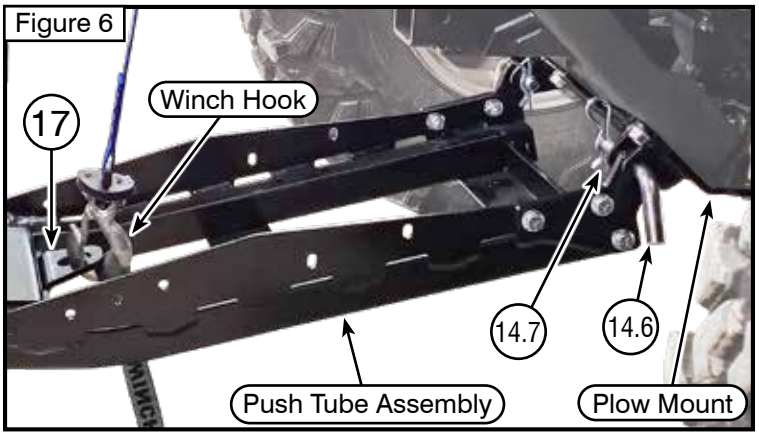

Figure 7

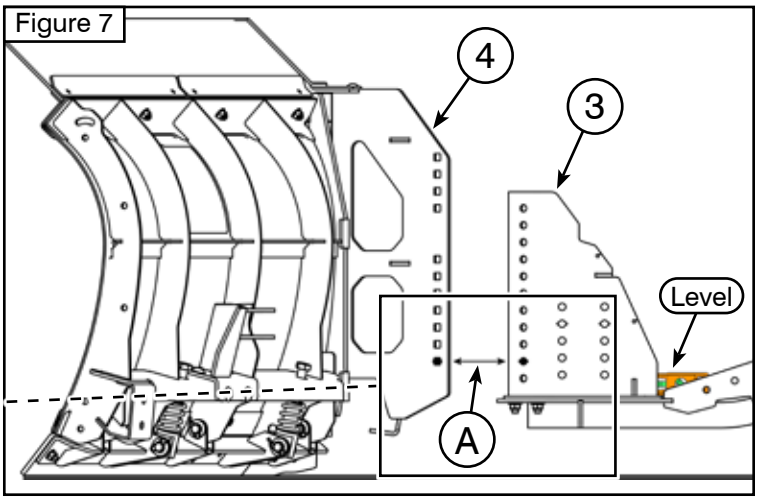

Figure 7a

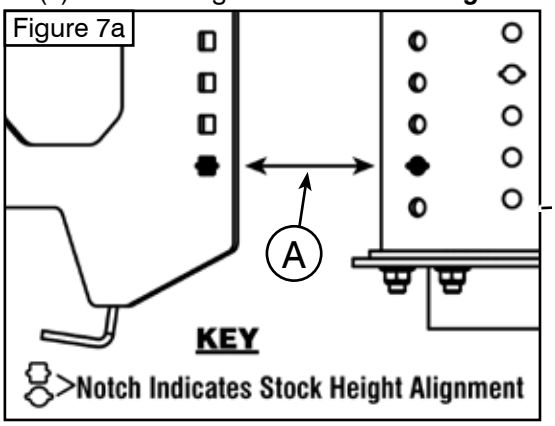

Note: *Line (A) between the holes with notches indicates "Stock" height as shown in **Figure 7(a)**. These holes may not line up for your machine. This is part of the height adjustment system.*

©2026 Copyright Kappers Fabricating, Inc. All rights reserved

INSTALLATION INSTRUCTIONS

15. Use the holes that line up closest for your machine height. Insert 3 bolts (14.1) through each side of the center bulkhead and secure with nuts (14.3) as shown in **Figure 8**. *This hardware should be through the lowest hole available, the highest hole available, and one of the center holes. Tighten evenly.*

    - *Detailed information about this connection can be found on **Page 9**. If you need to re-adjust your height at a later date, this can be adjusted by removing the 6 bolts (14.1) that hold these components together, and moving the rear actuator bracket (8) appropriately.*

16. Install Rear Actuator Bracket (8) in it's appropriate location by using the information shown on **Page 9** once you determine your plow height. Attach with Hardware (14.1 & 14.3). ***Figure 8** shows the stock location for the rear actuator bracket. The front and rear actuator brackets should be parallel with the ground.*

17. If installing Hydraulic Actuators, move on to step 18. For manual angling, continue below.

    - Install Manual Angling Tubes (106530) using the hardware provided within this box. Install hardware as shown in **Figure 9**. *The 106530 box comes with it's own manual. See that manual for more detail.*

18. Hydraulic Actuators (ACT203) should be installed with the hardware provided with the actuators. The hardware can be used in the orientation shown in **Figures 10-12**. *The same hardware configuration will be used for the front and rear of each actuator.*

19. *Hydraulic V-Plows include a separate manual for wiring the actuators. If not already completed, refer to that manual.*

Figure 8

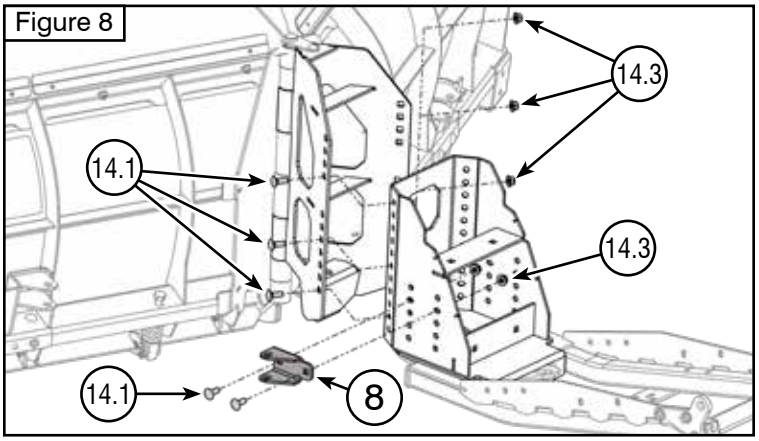

Figure 9

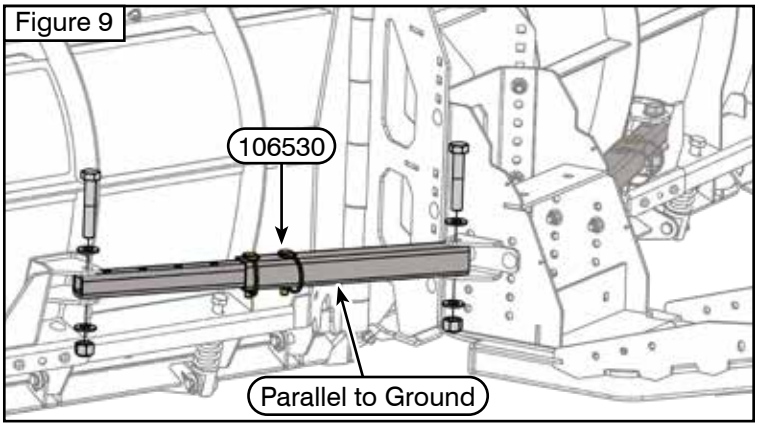

Figure 10

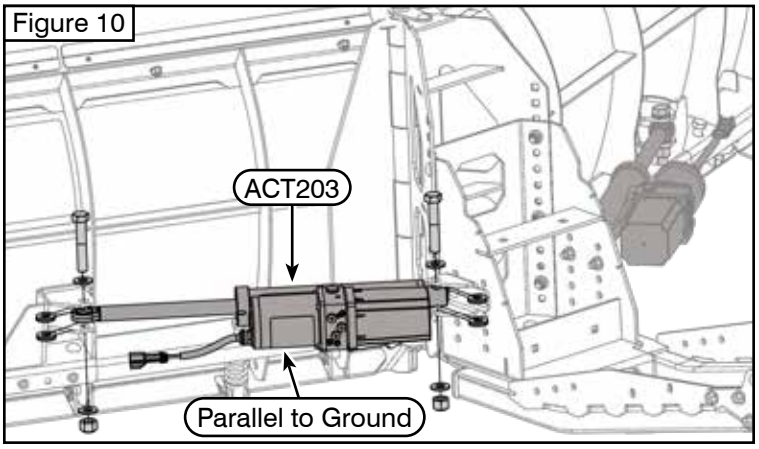

Figure 11 Front

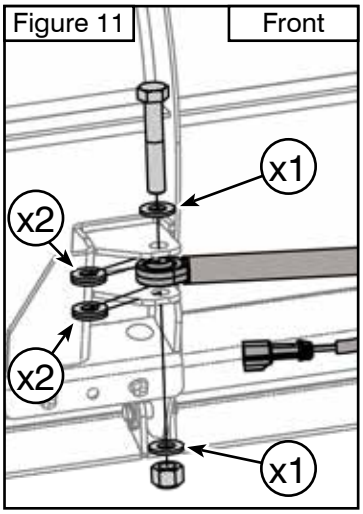

Figure 12 Rear

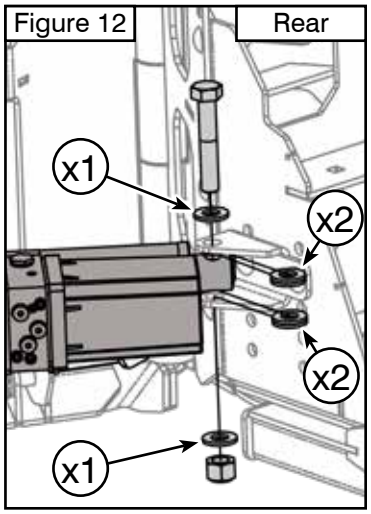

©2026 Copyright Kappers Fabricating, Inc. All rights reserved

Height Adjustment Details

This page shows the height options available for the plow system. All attachment options from +3” to -1” are shown in detail. Your plow foot height can affect this attachment as well.

Does Not Refer To Swift-Latch Mounting Location.

Stock Alignment

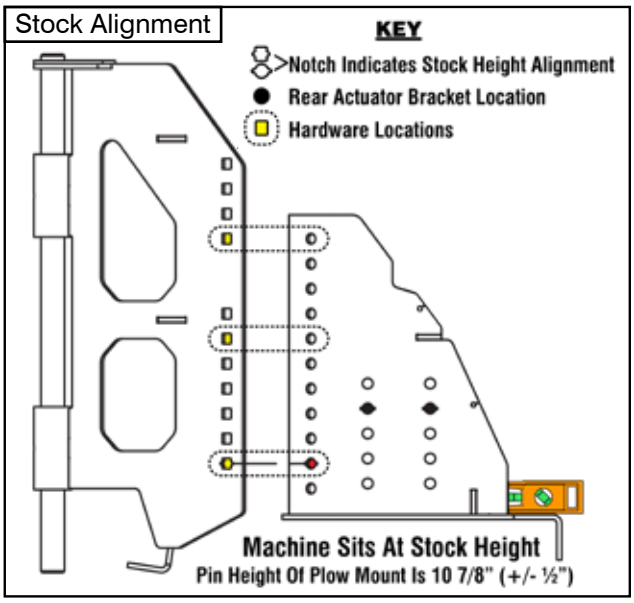

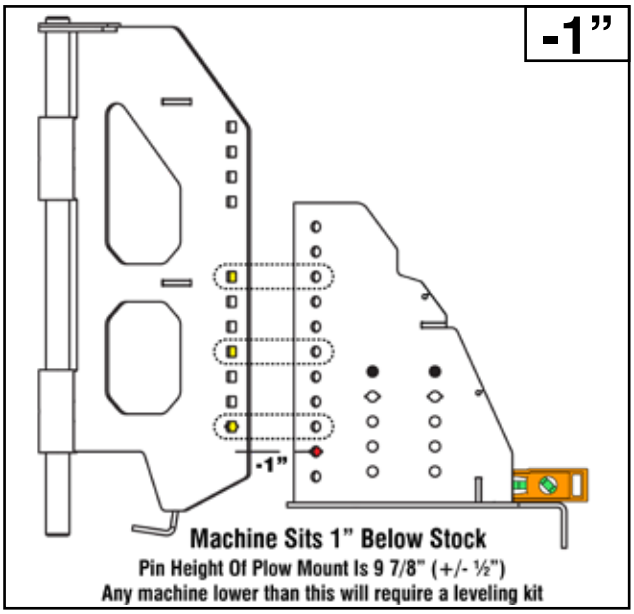

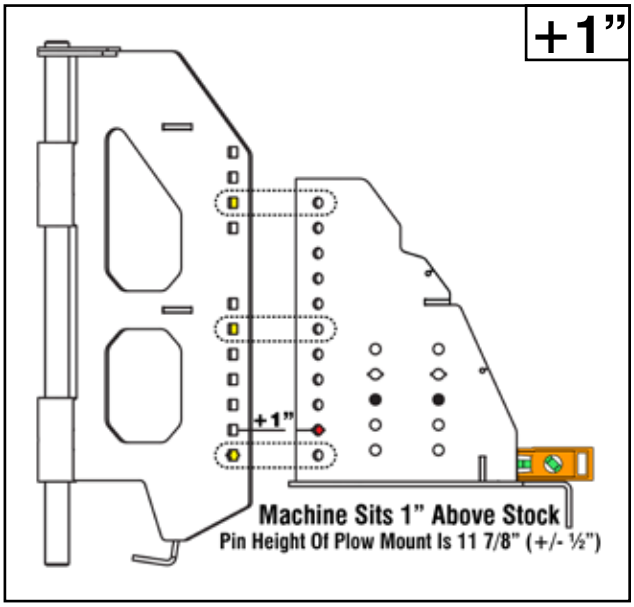

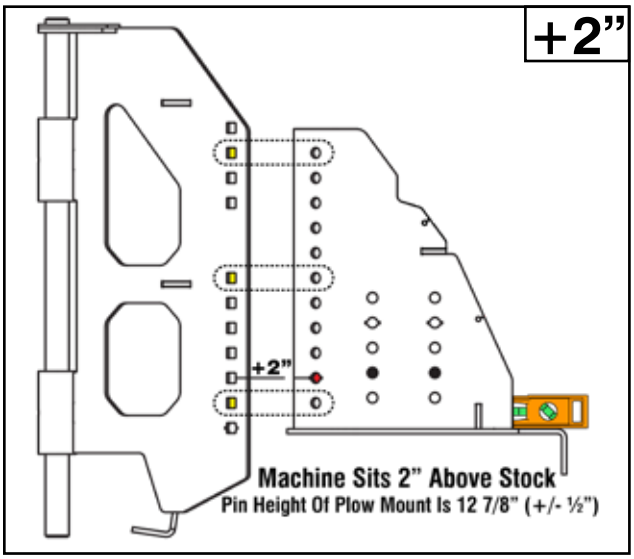

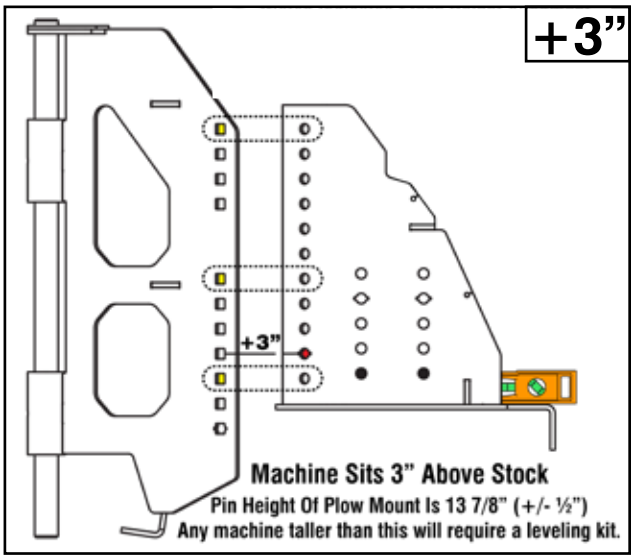

©2026 Copyright Kappers Fabricating, Inc. All rights reserved

Replacement Components For Box 1 (106180-DS)

Replacement components per box can be looked up here.

Item #	Part #	Description	Qty.
Box 1	106180-DS	V-Plow Driver Wing Box - Full Kit	1
1	106182	V-Plow Driver Wing	1
2	106184	V-Plow Trip Edge	1
3	106024	Poly Face V-Plow DS Wing	1
4	106103	Poly Face V-Plow Lower Clamp	1
5	106086	Upper Hold Down V-Plow Wing	1
6	106057	V-Plow Wing Wear Bar	1
7	106299	DS Center V-Plow Wear Bar	1
8	P800554	Plow Trip Spring Pivot	2
9	P800557	Plow Trip Spring	2
10	P800562	Modified 1/2”-13 X 3.25” Hex Bolt GR5	2
11	P800610	Clevis Pin 1/2” x 1 17/64”	5
12	P890048	1/2” Flat Washers	5
13	P800609	Self Locking Cotter Pin 1/2”	5
14	P890033	5/16”-18 X .75” Carriage Bolt GR5	8
15	P890003	5/16”-18 X 1.00” Carriage Bolt GR8	6
16	P890014	5/16”-18 Hex Nut Flange Nylock GR5	14

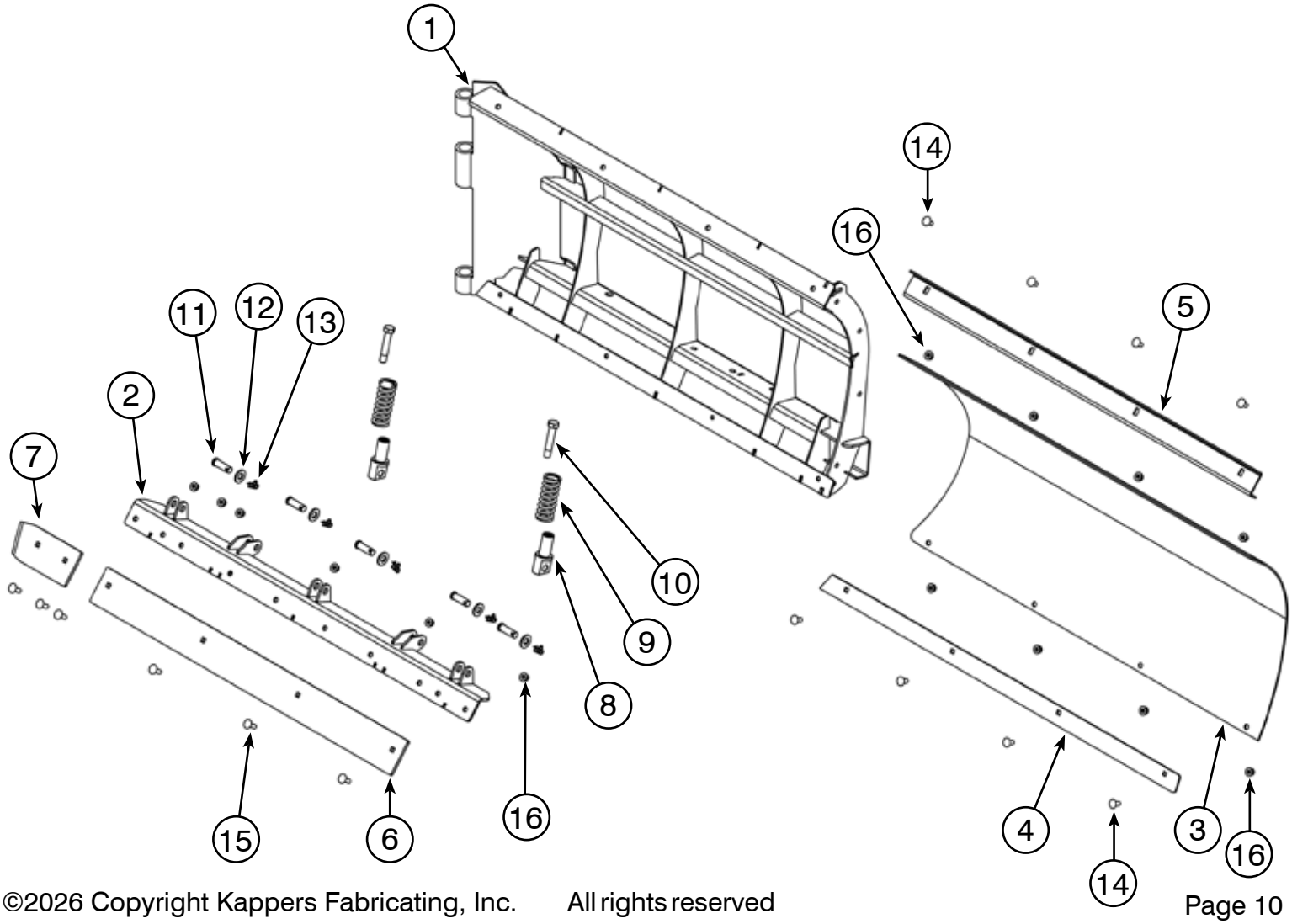

©2026 Copyright Kappers Fabricating, Inc. All rights reserved

Replacement Components For Box 2 (106180-PS)

Item #	Part #	Description	Qty.
Box 2	106180-PS	V-Plow Passenger Wing Box - Full Kit	1
1	106181	V-Plow Passenger Wing	1
2	106184	V-Plow Trip Edge	1
3	106023	Poly Face V-Plow PS Wing	1
4	106103	Poly Face V-Plow Lower Clamp	1
5	106086	Upper Hold Down V-Plow Wing	1
6	106057	V-Plow Wing Wear Bar	1
7	106298	PS Center V-Plow Wear Bar	1
8	P800554	Plow Trip Spring Pivot	2
9	P800557	Plow Trip Spring	2
10	P800562	Modified 1/2”-13 X 3.25” Hex Bolt GR5	2
11	P800610	Clevis Pin 1/2” x 1 17/64”	5
12	P890048	1/2” Flat Washers	5
13	P800609	Self Locking Cotter Pin 1/2”	5
14	P890033	5/16”-18 X .75” Carriage Bolt GR5	8
15	P890003	5/16”-18 X 1.00” Carriage Bolt GR8	6
16	P890014	5/16”-18 Hex Nut Flange Nylock GR5	14

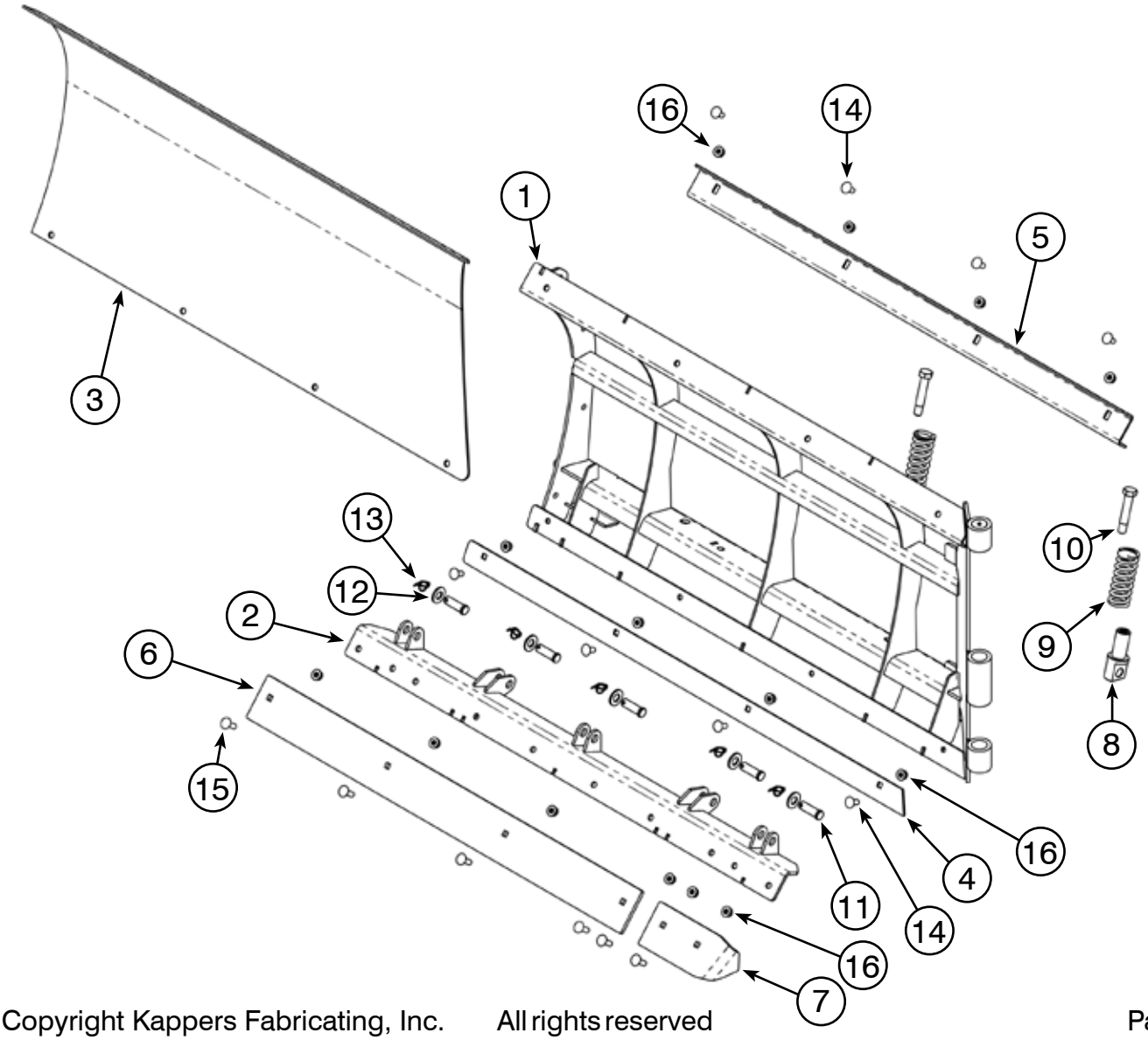

©2026 Copyright Kappers Fabricating, Inc. All rights reserved

Replacement Components For Box 3 (106180-CP)

Item #	Part #	Description	Qty.
Box 3	106180-CP		1
1	106517	V-Plow Push Tube Center Pivot	1
2	106516	V-Plow Blade Center Pivot	1
3	106061	V-Plow Pivot Pin	1
4	106507	Driver Side Wing Actuator Bracket	1
5	106506	Passenger Side Wing Actuator Bracket	1
6	106153	V-Plow Bulkhead Actuator Bracket	2
7	106088	V-Plow Plow Flap	2
8	106087	V-Plow Plow Flap Trim	4
9	105170	Plow Skid Kit - Straight - 2pc (Manual Included)	1
10	106505	Pro-Poly Premium Plow Marker	1
11	HK-102	Hardware Kit HK-102	1
11.1	CB-5Z-025-20-100	1/4”-20 X 1.00” Carriage Bolt GR5	9
11.2	FW-SAE-Z-025	1/4” Flat Washer	9
11.3	HNN-5Z-025-20	1/4”-20 Hex Nut Nylock GR5	9
12	HK-430	Hardware Kit HK-430	1
12.1	CB-5Z-038-16-100	3/8”-16 X 1.00” Carriage Bolt GR5	26
12.2	CB-5Z-038-16-150	3/8”-16 X 1.50” Carriage Bolt GR5	2
12.3	HNFN-5Z-038-16	3/8”-16 Hex Nut Flange Nylock GR5	28
12.4	P890033	5/16”-18 X .75” Carriage Bolt GR5	1
12.5	P890014	5/16”-18 Hex Nut Flange Nylock GR5	1
12.6	P800558	5/8” Hitch Pin	2
12.7	P800559	Bridge Pin Clip (Used With 5/8” Pin)	2
12.8	HBF-5Z-038-16-100	3/8”-16 X 1.00” Flange Bolt GR5	4

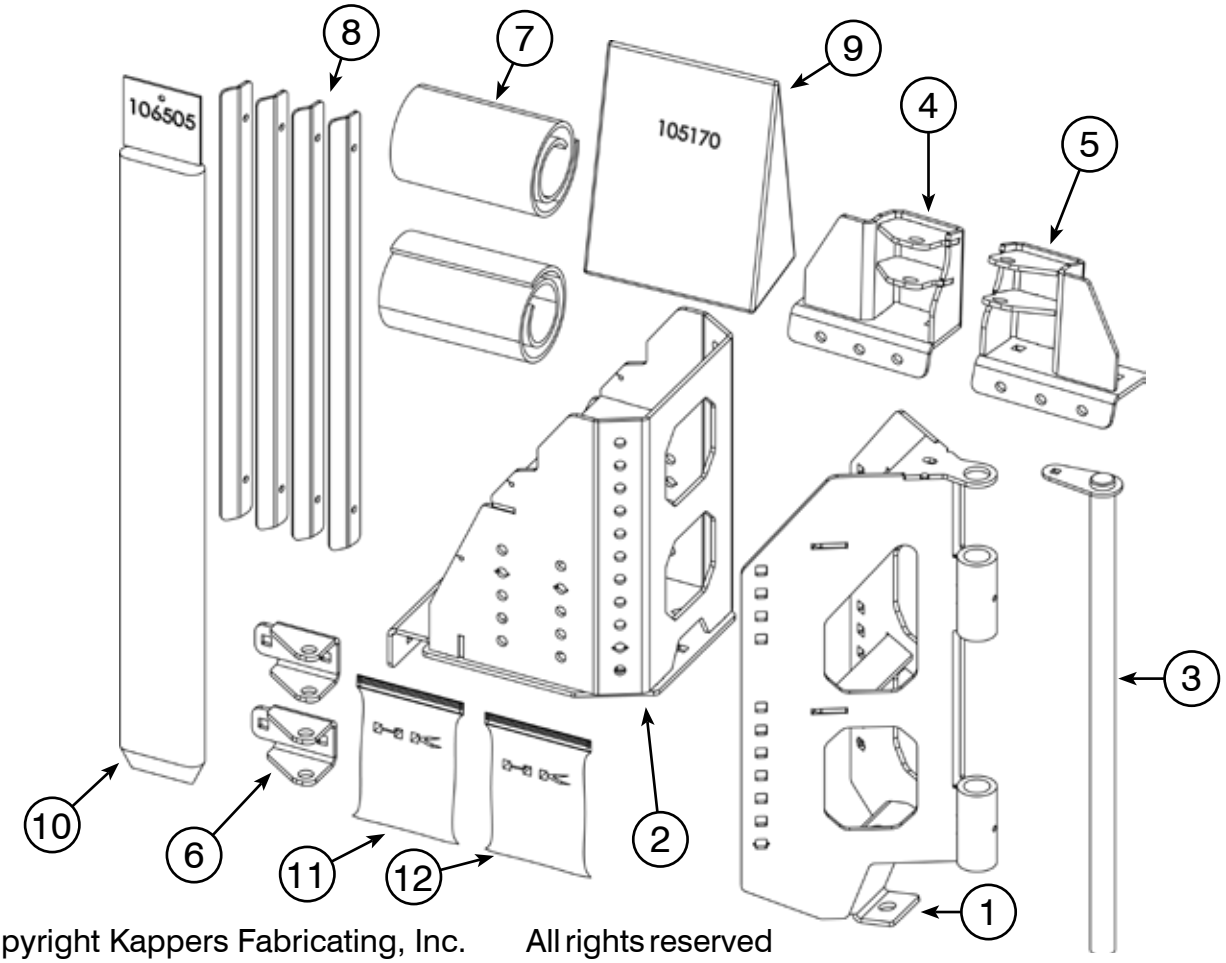

©2026 Copyright Kappers Fabricating, Inc. All rights reserved

Replacement Components For Box 4 - Option 1 (106180-APH)

Box 4 has 3 possible configurations. Other configurations are on the following pages.

Item #	Part #	Description	Qty.
Box 4	106180-APH	V-Plow Actuator Push Tube - Full Kit	1
1	106301	Push Tube Weldment	1
2	106302	UTV Push Tube Ear	2
3	ACT203	KFI Hydraulic Actuator (203mm) (Manual Included)	2
4	105138	UTV Lift Hook	1
5	105490	Single Plow Foot Kit	1
6	ACT-HAR	Actuator Relay Harness	2
7	ACT-VHR	Actuator V-Plow Hand Remote	1
8	ACT-HR-HAR	Hand Remote Harness	1
9	HK-398	Hardware Kit HK-398	1
9.1	HBF-5Z-038-16-125	3/8”-16 X 1.25” Hex Bolt Flange GR5 Serrated	6
9.2	HNFN-5Z-038-16	3/8”-16 Hex Nut Flange Nylock GR5	6
10	M106180	106180 Assembly Manual	1
11	M106180-HAR	V-Plow Actuator Wiring Manual	1

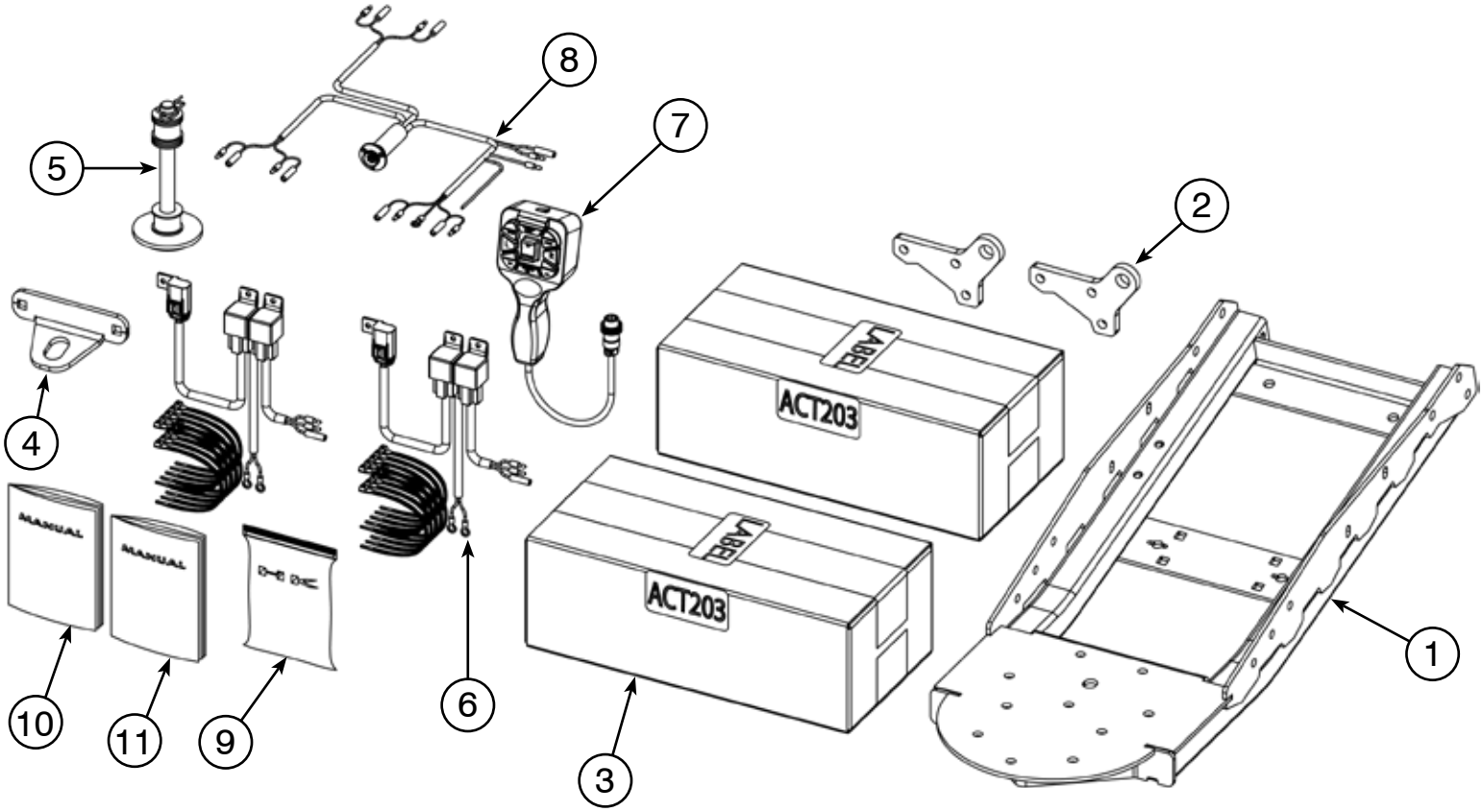

©2026 Copyright Kappers Fabricating, Inc. All rights reserved

Replacement Components For Box 4 - Option 2 (106180-AP)

Box 4 has 3 possible configurations. Other configurations are on the previous and following page.

Item #	Part #	Description	Qty.
Box 4	106180-AP	V-Plow Actuator Push Tube - Full Kit	1
1	106301	Push Tube Weldment	1
2	106302	UTV Push Tube Ear	2
3	ACT-BLDRS-K	Actuator Wiring Harness and Rocker Switch	2
4	ACT-HAR	Actuator Relay Harness	2
5	ACT203	KFI Hydraulic Actuator (203mm) (Manual Included)	2
6	105138	UTV Lift Hook	1
7	105490	Single Plow Foot Kit	1
8	HK-398	Hardware Kit HK-398	1
7.1	HBF-5Z-038-16-125	3/8”-16 X 1.25” Hex Bolt Flange GR5 Serrated	6
7.2	HNFN-5Z-038-16	3/8”-16 Hex Nut Flange Nylock GR5	6
9	M106180	106180 Assembly Manual	1
10	M106180-HAR	V-Plow Actuator Wiring Manual	1

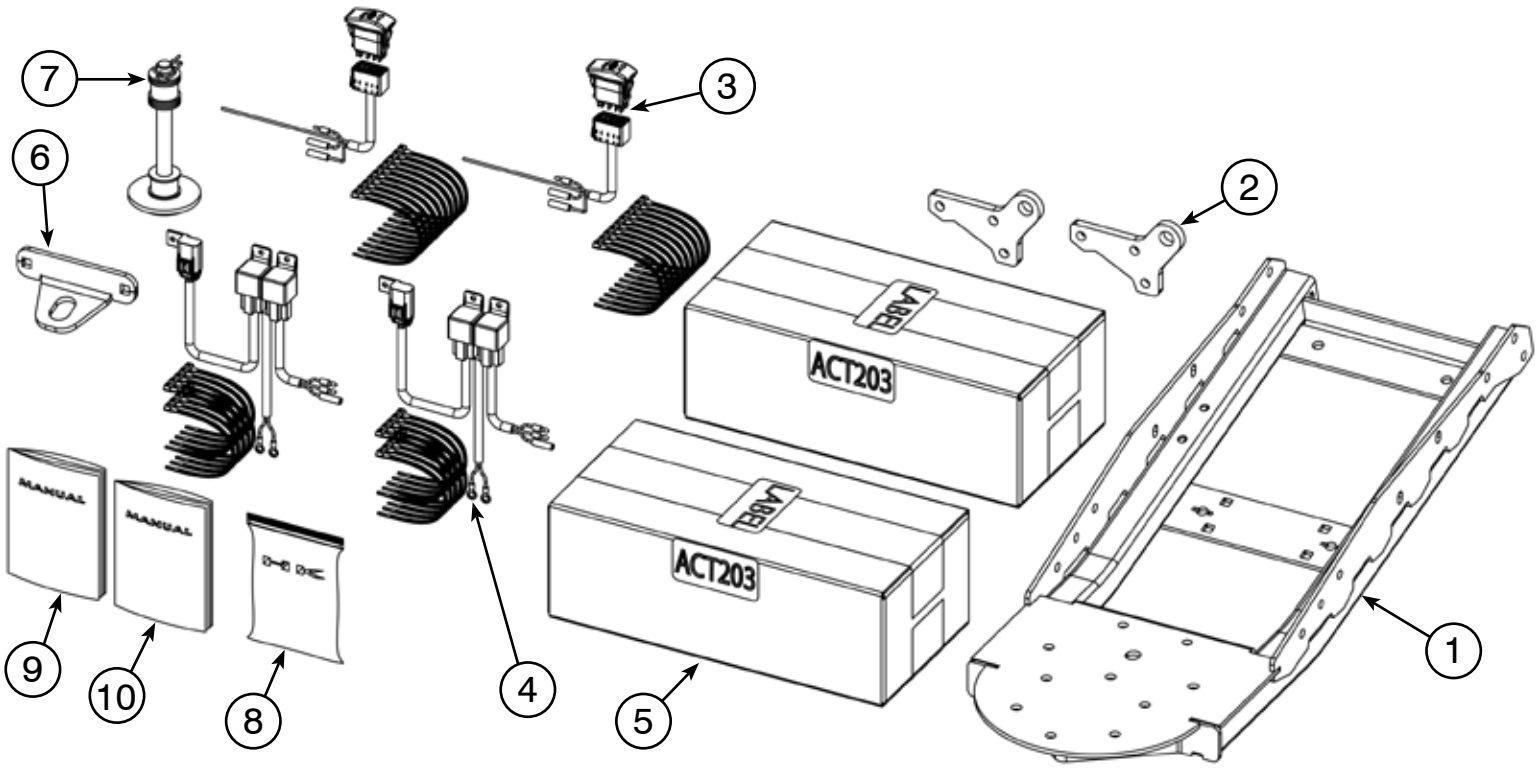

©2026 Copyright Kappers Fabricating, Inc. All rights reserved

Replacement Components For Box 4 - Option 3 (106180-MP)

Box 4 has 3 possible configurations. Other configurations are on the previous pages.

Item #	Part #	Description	Qty.
Box 4	106180-MP	V-Plow Manual Push Tube - Full Kit	1
1	106301	Push Tube Weldment	1
2	106302	UTV Push Tube Ear	2
3	106530	V-Plow Manual Kit (Manual Included)	1
4	105138	UTV Lift Hook	1
5	105490	Single Plow Foot Kit	1
6	HK-398	Hardware Kit HK-398	1
6.1	HBF-5Z-038-16-125	3/8”-16 X 1.25” Hex Bolt Flange GR5 Serrated	6
6.2	HNFN-5Z-038-16	3/8”-16 Hex Nut Flange Nylock GR5	6
7	M106180	106180 Assembly Manual	1

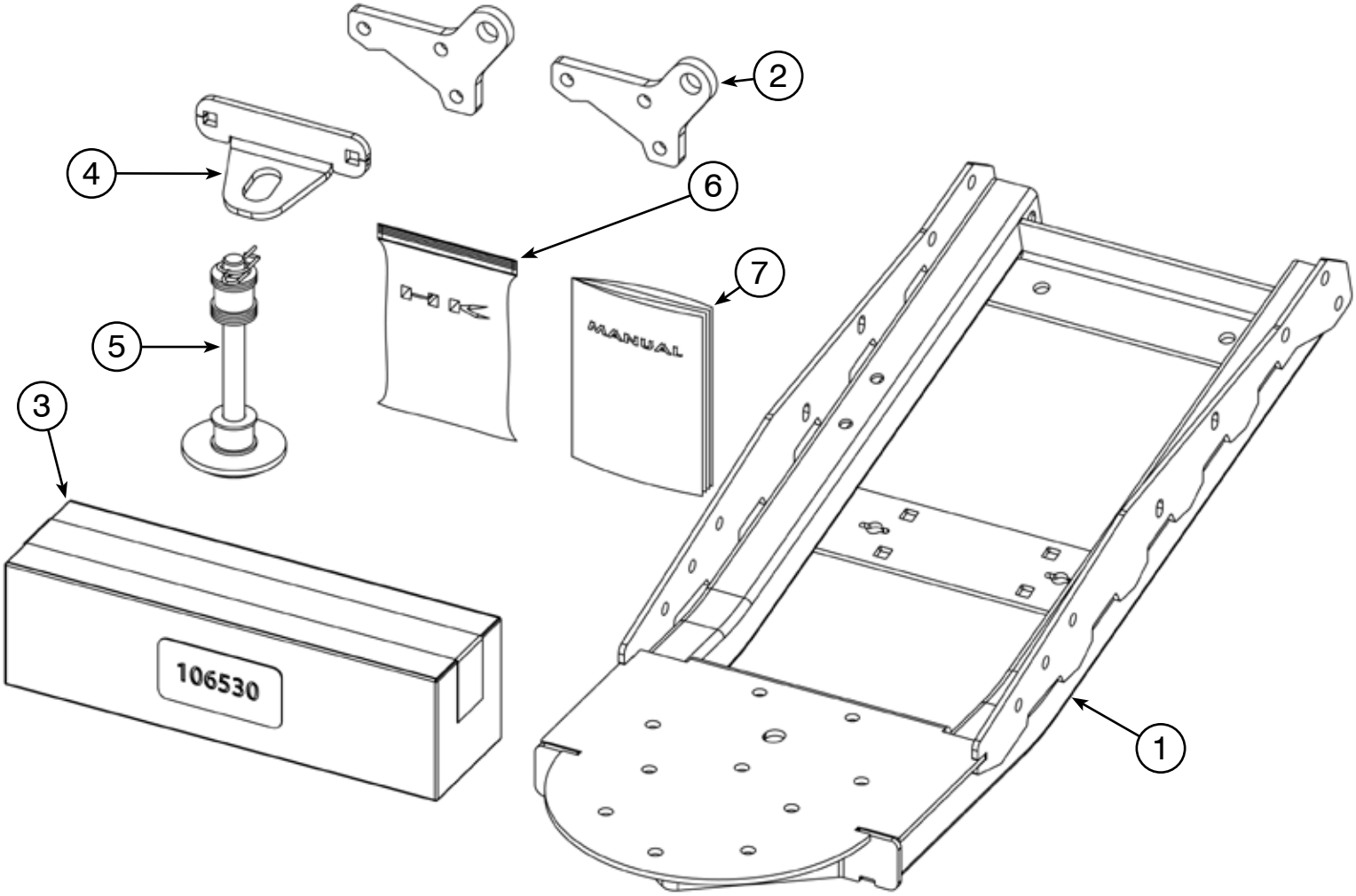

©2026 Copyright Kappers Fabricating, Inc. All rights reserved

Maintenance Information

Any components that swivels or pivots should be lubricated occasionally to reduce wear, increase longevity, and ensure proper operation. Some components that should be lubricated include the Center Pivot Pin, Tripping Wear Bar Pins and Actuator Bolts or Manual Wing Adjustment Bolts (depending on your configuration).

The plow system should be inspected at the start of each season and after any accidental impacts. If any component is bent or damaged, it could lead to excess damage later on, or even addition components becoming damaged if not fixed correctly. If needed, individual components can be purchased from KFI by contacting us directly at tech@kfiproducts.com or 877-346-2050 Option 2.

It is best to store the Hydraulic Actuators out of the weather or in a temperature controlled environment when not in use. If you need to store the plow system outdoors, it would be best to cover the actuators at minimum, or remove them from the plow system for storage. More information can be found in the actuator manual.

NOTES

©2026 Copyright Kappers Fabricating, Inc. All rights reserved

2 YEAR LIMITED WARRANTY

Kappers Fabricating, Inc. (KFI) warrants to the original purchaser that the product is free from defects in materials and workmanship for a period of two (2) years from the original date of purchase. We will repair or replace, at our discretion, parts found to be defective due to materials or workmanship. This warranty is subject to the following limitations and exclusions:

Commercial Use: The warranty period for any product used for commercial or rental is limited to ninety (90) days from the date of original purchase.

Limitations: This warranty applies only to products which have been properly assembled, adjusted, and operated in accordance with the instructions contained within this manual. This warranty does not apply to any product of Kappers Fabricating, Inc. that has been subject to alteration, misuse, abuse, improper assembly or installation, or shipping damage.

Exclusions: Excluded from this warranty are normal wear, normal adjustments, and normal maintenance.

THIS WARRANTY DOES NOT APPLY TO ANY INCIDENTAL OR CONSEQUENTIAL DAMAGES AND ANY IMPLIED WARRANTIES ARE LIMITED TO THE SAME TIME PERIODS STATED HEREIN FOR ALL EXPRESSED WARRANTIES.

THE WARRANTY SET FORTH ABOVE IS THE ONLY WARRANTY. THERE ARE NO OTHER WARRANTIES, EXPRESS OR IMPLIED, INCLUDING BUT NOT LIMITED TO IMPLIED WARRANTIES OF MERCHANTABILITY OR FITNESS FOR A PARTICULAR PURPOSE.

Some states do not allow the exclusion of implied warranties or the exclusion or limitation of liability for incidental or consequential damages, or limitations on how long an implied warranty lasts, so the above limitation or exclusion may not apply to you. This warranty gives you specific legal rights. You may also have other rights that vary from state to state.

In the event you have a claim under this warranty, contact KFI's Technical Service and KFI will troubleshoot any issue via phone or e-mail. If the problem is not corrected by this method, KFI will, at its option, authorize evaluation, repair or replacement of the defective part or component at a KFI Service Center. KFI will provide you with a case number for warranty service. Please keep it for future reference. Repairs or replacements without prior authorization, or at an unauthorized repair facility, will not be covered by this warranty.

All transportation charges, damage, or loss incurred during transportation of parts submitted for replacement or repair under this warranty shall be borne by the purchaser. Should you have any questions concerning this warranty, please contact us toll-free at 1-877-346-2050. The model number, serial number (If applicable), date of purchase, and the name of the authorized KFI dealer from whom you purchased the product will be needed before any warranty claim can be processed.

For warranty inquiries outside the U.S.A. and Canada, contact your local dealer/distributor.

For countries not covered by a local dealer/distributor, please contact us at www.kfiproducts.com.

Product Registration

Please register your product with Kappers Fabricating, Inc. (KFI) within fifteen (15) days of purchase to assist us in handling any warranty issues that may arise by filling out this Registration card and submitting it with a copy of your sales receipt from one of KFI's official resellers. Failure to complete and return this Registration card does not diminish your warranty rights.

Please refer to the above section for complete terms of this warranty.

WARRANTY IS NON-TRANSFERABLE

Please Print Clearly

Fill out and send this section to:
Kappers Fabricating, Inc.
Warranty Registration Department
1015 Industrial Drive, PO Box 32
Spring Valley, MN 55975, U.S.A.

Or Register Online

Blade P/N_____

Name_____

Street Address_____

City_____State_____ Zip Code_____

Phone_____Email_____

Date of Purchase_____

Authorized KFI Dealer Name_____

©2026 Copyright Kappers Fabricating, Inc. All rights reserved

Kappers Fabricating, Inc.

721 Sata Dr.
Spring Valley, MN 55975

1-877-346-2050

www.kfiproducts.com

©2026 Copyright Kappers Fabricating, Inc. All rights reserved

JOHN DEERE GATOR XUV 550

Plow Mount
PART #105455 Rev B

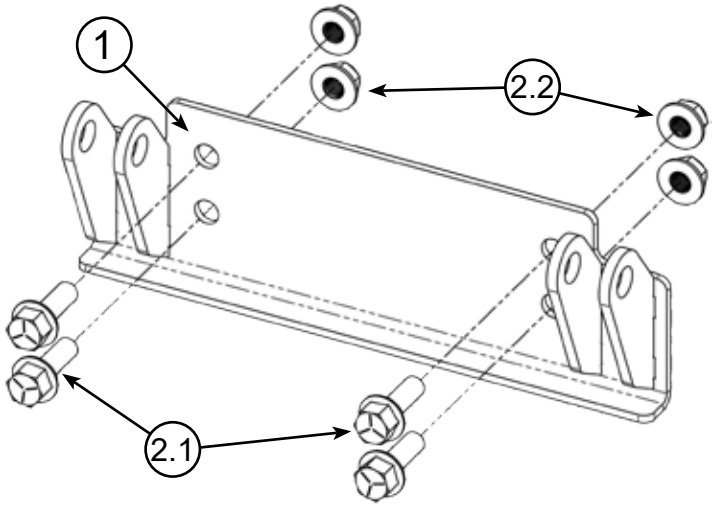

Kit Components:		
Item #	Qty.	Description
1	1	Plow Mount (106451)
2	1	Hardware Kit (HK-149)
2.1	4	1/2”-13 X 1.5” Hex Bolt Flange Serrated GR5
2.2	4	1/2”-13 Hex Nut Flange Nylock GR5

Note: Make sure all hardware needed to complete this mount is in the package. Thoroughly read through and understand the instructions before installing.

1. Remove bolts (A) on front lower panel as shown in **Figure 1**. Bumper will stay in place.
2. Place Plow Mount (1) over the lower front panel as shown in **Figure 2**. Use Bolts (2.1) and Nuts (2.2 Not Shown) to secure the Plow Mount (1) and Bumper.
3. Tighten all bolts evenly.
4. See UTV Push Tube Instruction Manual for Push Tube attachment.

Figure 1

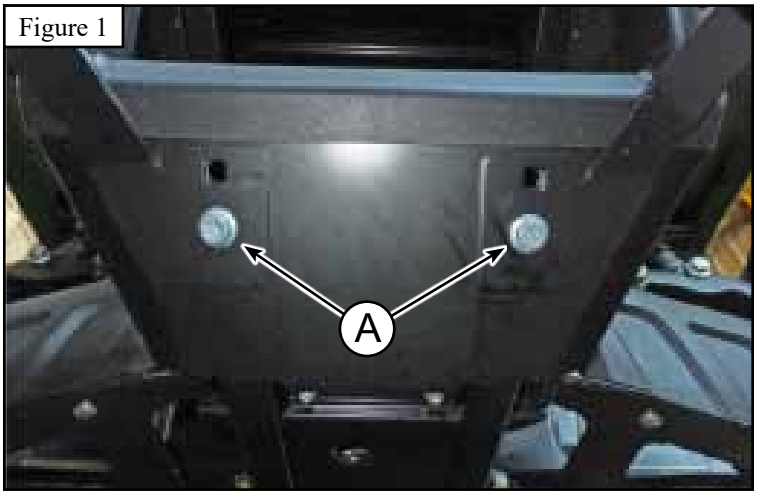

Figure 2

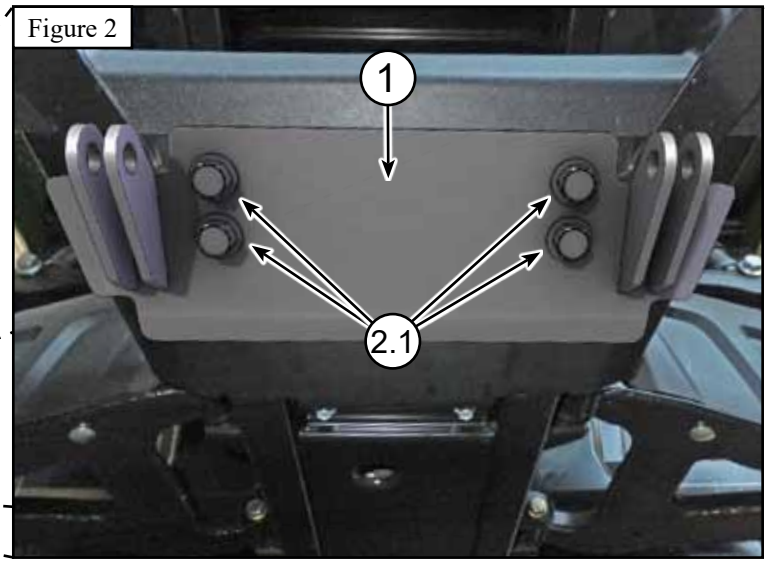

©2024 Copyright Kappers Fabricating, Inc. All rights reserved

JOHN DEERE GATOR XUV

Plow Mount PART # 105395
Hardware Kit: HK-132

Kit Components:

Qty.	Part Description
1	Plow Mount Plate
2	M10-1.5mm x 30mm Bolt
2	M10-1.5mm x 25mm Bolt
2	M10-1.5mm Nylock Flanged Nut

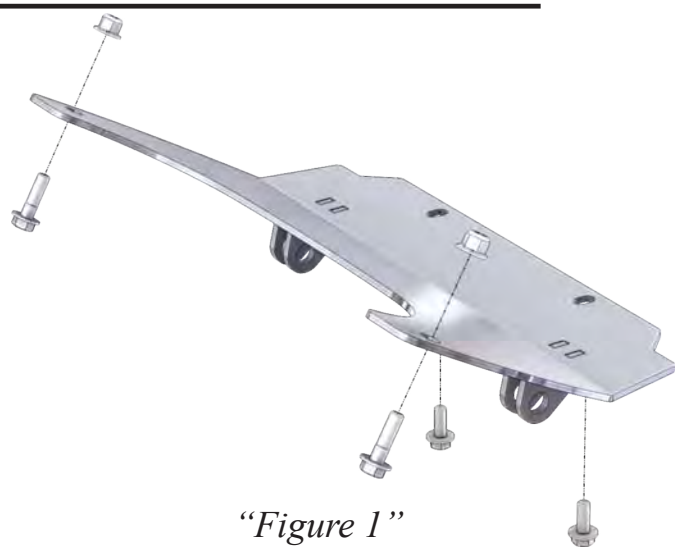

"Figure 1"

INSTALLATION INSTRUCTIONS:

1. Remove bolts (A) on lower front panel as shown in Figure 2. Panel will come off.
2. Place mount plate over lower front panel and reinstall panel and mount plate as shown in Figure 3. Use the 30mm bolts (B) and nuts for the upper part of the panel and the 25mm bolts (C) for the underside of the panel.
3. Tighten down all bolts.
4. See UTV Plow Tube System instruction manual for tube attachment.

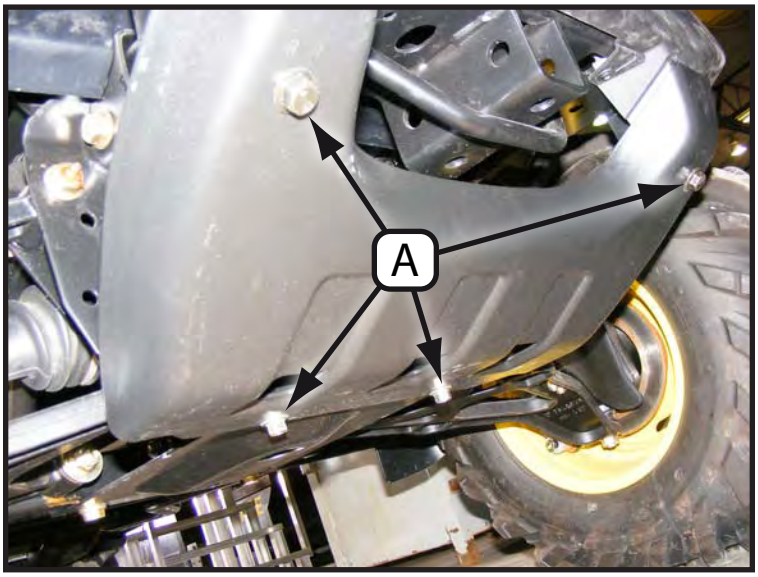

"Figure 2" Front of UTV

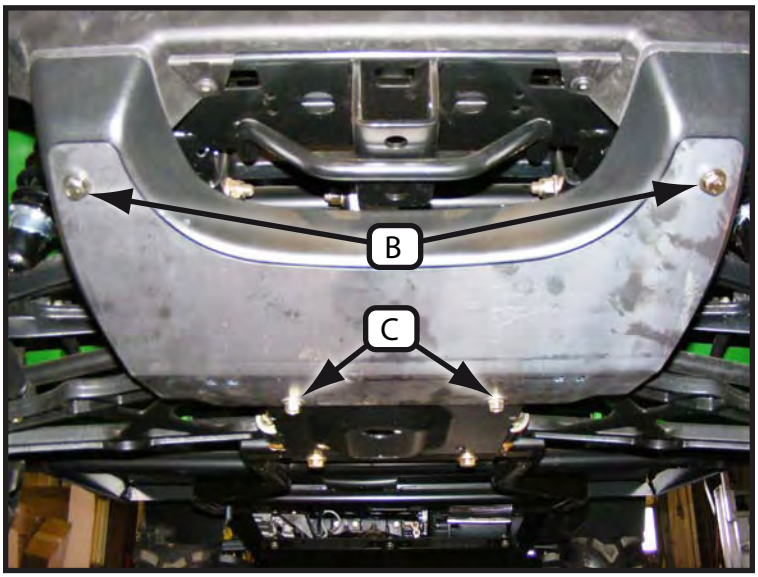

"Figure 3" Mount Plate Install

MADE IN THE USA

©2011 Copyright Kappers Fabricating, Inc. All rights reserved

JOHN DEERE XUV 835/865

Plow Mount PART #105865

Kit Components:		
Item #	Qty.	Description
1	1	Plow Mount

Figure 1

Note: Make sure all hardware needed to complete this mount is in the package. Thoroughly read through and understand the instructions before installing.

Installation Instructions

1. Remove factory Hardware (A) see Figure 2.
2. Align your mount with the holes and reinstall existing harware (A) see Figure 2.
3. Tighten all hardware evenly
4. See UTV Plow System Instruction Manual for tube attachment.

Figure 2

©2022 Copyright Kappers Fabricating, Inc. All rights reserved

ASSAULT SERIES
SYNTHETIC CABLE
ATV/UTV WINCH

MODEL #AS-50x
5,000 LB. (2268 KG)

OPERATOR'S MANUAL

READ AND SAVE THIS MANUAL. This manual contains important safety precautions which should be read and understood before operating the product. Failure to do so could result in serious injury. This manual should remain with the product. Specifications, descriptions, and illustrations in this manual are as accurate as known at the time of publication, but are subject to change without notice.

Place serial label here for reference.

SERIAL NO. LABEL

Support:

1-877-346-2050

or visit **www.kfiproducts.com**

Made in China - REV 20250224

KFI Products - Kappers Fabricating, Inc., Spring Valley, MN USA

TABLE OF CONTENTS

Introduction **1**
Accessories 1
This Manual 1
Safety Definitions **1**
Important Safety Instructions **2**
Controls and Features **4**
Installation **5**
Mount the Winch 5
Winch Assembly - Generic Install 5
Mount the Contactor 6
Install UTV Dash Mounted Rocker Switch 6
Mount the Hand Remote Socket 6
Wiring the Winch 7
Winch Wiring Diagram 8
Motor End Terminal Rotation 8
Controller Wiring Diagram 9
Cable Hook Stopper Installation and Use 9
General Tips for Safe Operation 10
Self Recovery 10
Winching Techniques 11
Synthetic Cable Usage 12
Snow Plow Usage 12
Protective Sheath 12
Maintenance **13**
Motor 13
Lubrication 13
Synthetic Cable Inspection 13
Cable Assembly Replacement 14
Specifications **15**
Performance: 15
Parts Diagram 16
Parts List 17
Troubleshooting **18**
Warranty **19**
Contact Information 20

INTRODUCTION

Congratulations on your purchase of a KFI winch. KFI researches and develops winches to strict specifications. With proper use and maintenance, this winch will bring years of satisfying service.

Accessories

Kappers Fabricating, Inc. manufactures, purchases, and sells accessories designed to help you get the most from your purchase. To find out more about our products, visit our web site at:

www.kfiproducts.com

This Manual

Every effort has been made to ensure the accuracy and completeness of information in this manual. We reserve the right to change, alter, and or improve the product and this document at any time without prior notice.

Record the model as well as date and place of purchase for future reference. Have this information available when ordering parts and when making technical or warranty inquiries.

KFI TECHNICAL SUPPORT TEAM
1-877-346-2050
MODEL NUMBER
AS-50x
SERIAL NUMBER
DATE OF PURCHASE
PURCHASE LOCATION

SAFETY DEFINITIONS

The purpose of safety symbols is to attract your attention to possible dangers. The safety symbols, and their explanations, deserve your careful attentions and understanding. The safety warnings do not by themselves eliminate any danger. The instructions or warnings they give are not substitutes for proper accident prevention measures.

DANGER DANGER indicates a hazardous situation which, if not avoided, will result in death or serious injury.

WARNING WARNING indicates a hazardous situation which, if not avoided, could result in death or serious injury.

CAUTION CAUTION indicates a hazardous situation which, if not avoided, could result in minor or moderate injury.

NOTICE NOTICE indicates information considered important, but not hazard-related (e.g. messages relating to property damage or physical injury).

IMPORTANT SAFETY INSTRUCTIONS

WARNING Cancer and Reproductive Harm - www.P65Warnings.ca.gov

WARNING Read this manual thoroughly before operating the winch. Failure to follow instructions could result in serious injury or death.

WARNING Do not exceed the rated capacity.

DANGER Do not use this winch for lifting or moving people or animals.

DANGER Keep yourself and others a safe distance to the side of the cable when under tension.

DANGER Never step over a cable or near a cable under load.

WARNING The cable may break before the motor stalls. For heavy loads at or near rated capacity, use a pulley block/snatch block to reduce the load on the cable.

WARNING Do not move the vehicle to pull a load (towing) on the winch cable. This could result in cable breakage.

WARNING Pull only on area of the vehicle as specified by the vehicle manufacturer.

WARNING Do not use the winch to secure or hold a vehicle for a long period of time. Do not use the winch to secure a vehicle for transport.

WARNING Disconnect the remote control and battery leads when not in use for extended periods.

WARNING Avoid “shock loads” by using the control switch intermittently to take up slack in the cable. “Shock loads” can far exceed the rated capacity for the winch cable and drum.

Do not accelerate your vehicle while winching. Loss of traction can cause a shock load on the cable. Do not use cable as a pull strap.

WARNING Batteries contain acid and produce explosive gases. Keep sparks, flames and cigarettes away from batteries at all times. Wear safety glasses and protect the eyes at all times. Do not lean over the batteries during operation.

WARNING Do not use as a hoist. Do not use for overhead lifting.

WARNING When re-spooling the cable, ensure that the cable spools in the under-wind position with the cable entering the drum from the bottom, not the top.

To re-spool correctly, and while wearing gloves, keep a slight load on the cable while pushing the remote button to draw in the cable. Walk toward the winch not allowing the cable to slide through your hands. Do not let your hands get within 12 in. of the winch while re-spooling. Turn off the winch and repeat the procedure until a few feet of cable are left. Disconnect the remote control and finish spooling by rotating the drum by hand with the clutch disengaged. Keep hands clear of the fairlead and drum while the winch is under power.

CAUTION Use gloves to protect hands when handling the cable. Never let the cable slide through your hands.

CAUTION Do not wrap the cable around any object and hook it back onto itself.

CAUTION Apply blocks to the wheels of the vehicle when on an incline.

CAUTION Duration of winching pulls should be kept as short as possible.

If the motor becomes uncomfortably hot to the touch, stop winching immediately and let it cool down for a few minutes. Do not pull for more than one minute at or near the rated load.

CAUTION If the motor stalls, do not maintain power to the winch.

Electric winches are designed and made for intermittent use and should not be used in constant duty applications.

CAUTION Never release the free spool clutch when there is a load on the winch.

CAUTION Use the Hand-Saver strap when handling the winch hook for spooling or unspooling the cable.

CONTROLS AND FEATURES

Read this operator's manual before operating your winch. Familiarize yourself with the location and function of the control features. Save this manual for future reference.

Winch

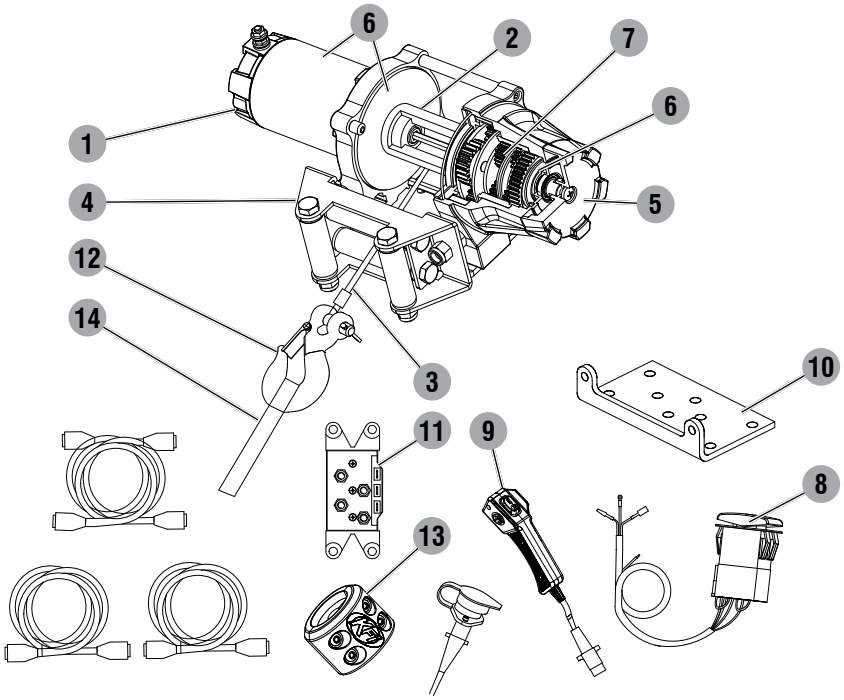

1. **Motor** – 1.22 HP 12V DC motor provides power to the planetary gear mechanism.
2. **Winch Drum** – The winch drum is the cylinder on which the cable is stored. It can feed or wind the cable depending on the switch assembly.
3. **Synthetic Cable** – 15/64 in. x 38 ft. Synthetic cable designed specifically for load capacity of 5,000 lbs. (36 usable feet with five wraps on the drum). The synthetic cable feeds onto the drum in the "under wind" position through the roller fairlead (4) and is looped at the end to accept the clevis hook pin (12).
4. **Roller Fairlead** – When using the winch at an angle the roller fairlead acts to guide the synthetic cable onto the drum and minimize damage to the cable from abrasion on the winch mount or bumper.
5. **Free Spooling Clutch** – The clutch allows the operator to manually disengage ("Release") the spooling drum from the gear train. Engaging the clutch ("Engage") locks the winch into the gear system.
6. **Braking System** – Braking action is automatically applied to the winch drum when the winch motor is stopped or there is a load on the cable.
7. **Planetary Gear System** – The reduction gears convert the winch motor power into extreme pulling forces. This system allows high torque while maintaining compact size and light weight.
8. **UTV Dash Mounted Rocker Switch** – Premium look & quality dash mounted switch for easy access.
9. **Hand Held Remote** – Hand held switch with a remote socket for powering the cable in or out of your winch drum.

10. **Fairlead Mount** – Adapter to mount the winch and fairlead for utility applications.

11. **Contactor** – Power from the vehicle battery flows through the weather sealed solenoid switch before being directed to the winch motor.

12. **Clevis Hook** – Provides a means for connecting the looped ends of cables to an anchor.

13. **Cable Hook Stopper** – Protects the rollers, motors, and gears.

14. **Hand Saver Strap** – Used to assist cable feed.

INSTALLATION

This KFI 5,000 lb winch is designed with a bolt pattern that is standard for this class of winch. Many winch mounting kits are available that utilize this bolt pattern for the most popular ATVs and UTVs. You can find most of the ATV/UTV winch mounts on our website (www.kfiproducts.com).

Mount the Winch

WARNING Before starting to install this winch, disconnect the vehicle ground and positive leads from the battery.

1. Install the winch and fairlead with the supplied hardware per the instructions provided with the model specific winch mounting kit or prepare a flat, secure mounting location for the winch.

CAUTION Mounting bolts must be SAE Grade 5 or better and torqued to 17 ft. lbs.

NOTICE This kit includes mounting bolts with different lengths for fastening the winch (M8 x 20, 25, and 30mm long). Use the length that best fits your mounting application. Refer to vehicle specific mount instructions for more information.

CAUTION If you choose not to use a model specific mounting kit, you will need to drill holes in the structural support of the vehicle. Be certain that your structural support is sufficient for the pulling forces of this winch.

2. Attach the winch using supplied M8 x 25mm or 30mm bolts and washers thru the fairlead bracket or model specific winch mount and into the winch.

3. Disengage the clutch by rotating the clutch cap to the RELEASE position. Release the synthetic cable and pull through the roller fairlead.

4. Attach the clevis hook to the cable and the hand saver strap to the clevis hook.

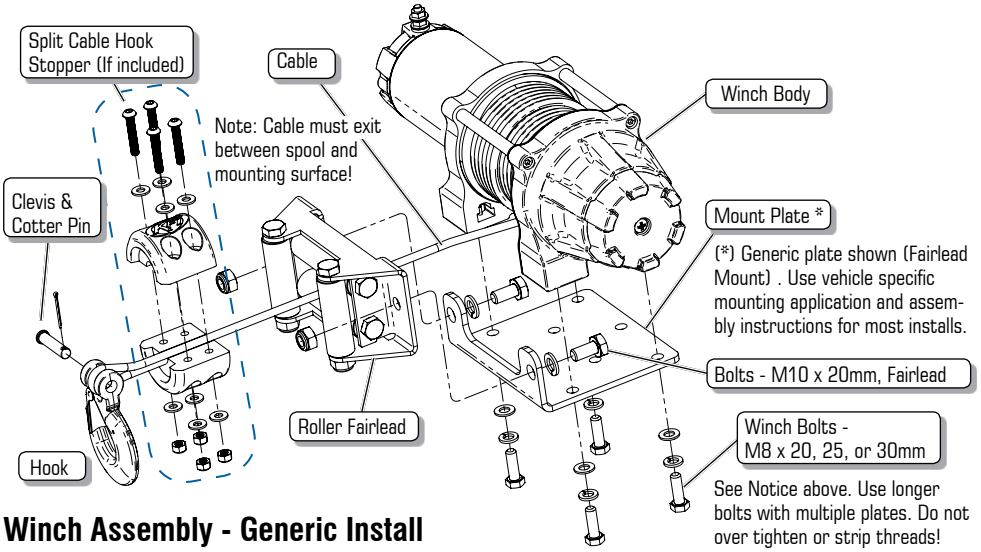

Winch Assembly - Generic Install

Mount the Contactor

5. Find a location for the contactor. If the model specific mounting kit does not indicate a recommended contactor location, then it is recommended that the contactor be mounted close to the battery in a clean dry location. Be certain the location you choose allows for sufficient clearance form all metal components. Drill mounting holes if required. Once a location is found, do not install until all wiring is completed.

Install UTV Dash Mounted Rocker Switch

6. Most UTV's & SxS's have a predefined switch location that is scored or marked for mounting and requires finish cutting with a knife.

7. Use the cut-out dimensions shown below to cut the switch location pattern if your dash doesn't have a predefined knockout or area.

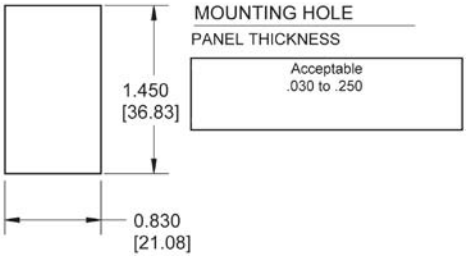

8. Once your switch is mounted you can route wires back to the contactor location.

9. Splice the end of the red wire to an ignition controlled (keyed) power source using the supplied wire splice. You may need to use a test light or multimeter to locate a suitable wire. The wire should only have power when the key is in the ON position.

Mount the Hand Remote Socket (optional)

10. Determine a mounting location for the Hand Remote socket. Be certain the area behind the selection location is clear.

11. Drill three holes as shown in the following figure and install using supplied hardware. You can also use the rubber cap attached to the remote socket as a template.

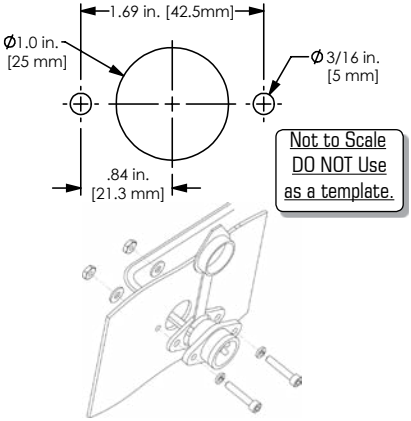

12. Once your remote socket is mounted, you may route wires back to the contactor location.

13. Splice the end of the red wire to an ignition controlled (keyed) power source using the supplied wire splice. You may need to use a test light or multimeter to locate a suitable wire. The wire should only have power when the key is in the ON position.

14. Secure the wires with supplied cable ties.

Wiring the Winch

CAUTION Never route electrical wires across any sharp edges, through or near moving parts, or near parts that become hot.

15. Connect the yellow and blue wires to the motor terminals on the winch. Torque the nuts on the motor to 5.7 N-m (50 in lbs) Route the opposite ends to the contactor location. (See diagram on page 8).
16. Connect the yellow and blue wires to the contactor block (yellow to yellow, blue to blue). DO NOT tighten nuts. (See diagram page 8).
17. Connect the red and black wires to your contactor block (red to red, black to black). DO NOT tighten nuts. Route the opposite ends to the battery location (See diagram page 8).
18. Connect the mini rocker switch to the contactor block (black to black, green to green). (See diagram on page 9).
19. Once all wiring is connected to the contactor, finish mounting it to the contactor location using supplied M6 hardware (See diagram page 8).

WARNING Failure to follow specific wiring instructions may result in damage to your wiring system or equipment.

NOTICE Depending on the location of the contactor, you may need to use an alternate winch wiring configuration. Please see the "Alternate Winch Wiring Diagram" available on: www.kfiproducts.com

20. Torque the contactor terminal nuts to 4.5 N-m (40 in lbs) Do NOT over tighten.
21. Place all terminal boots over terminals and secure all cables with zip ties or electrical tape.

NOTICE If you are installing the hand remote along with the mini rocker switch, you will need to connect the remote socket to the contactor and then the mini rocker switch to the remote socket (see diagram on page 9).

22. Connect the battery leads from the contactor to the vehicle's battery (black to black, and red to red, see diagram on page 8).
23. Check for proper drum rotation. Turn the clutch cap to the RELEASE position. Pull out some cable from the drum and then turn the clutch cap to the ENGAGE position to engage the gears. Make sure your vehicle is running and press the cable out button on the switch. If the spool is turning and releasing more cable, then your connections are accurate. If the spool is turning and collecting more cable, then reverse the leads on the motor. Repeat and check rotation.

CAUTION Battery cables should not be drawn taut. Leave some slack for cable movement.

NOTICE Always hold the bottom nut with a wrench while tightening motor wire terminals. Do not allow the bottom nut to spin, else you may damage the end cap.

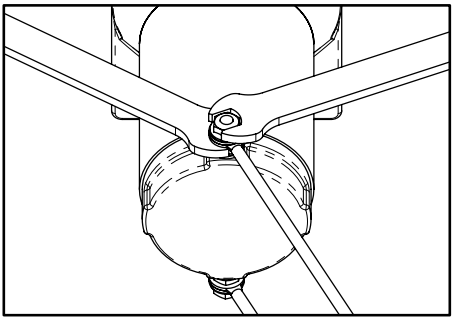

Proper Terminal Tightening

Winch Wiring Diagram

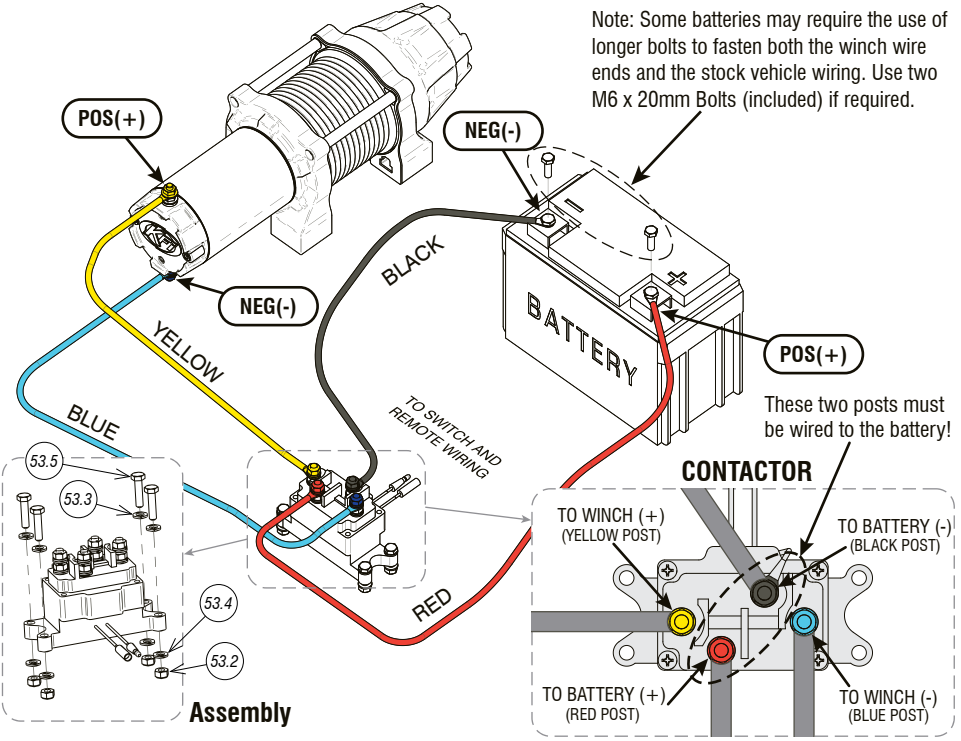

Motor End Terminal Rotation

With some applications, the motor terminals may need to be rotated to avoid interference with other components. If rotation is required please give us a call at 1-877-346-2050 for instructions or visit our website at www.kfiproducts.com and look in the support section.

STANDARD → **45° ROTATION** → **90° ROTATION**

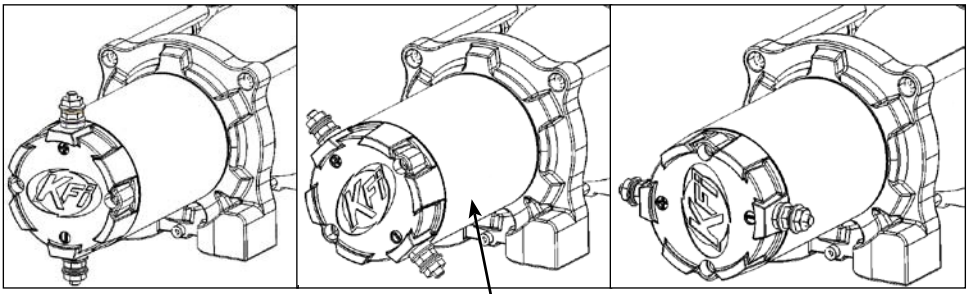

Note: Motor casing rotates with End Cap

Controller Wiring Diagram

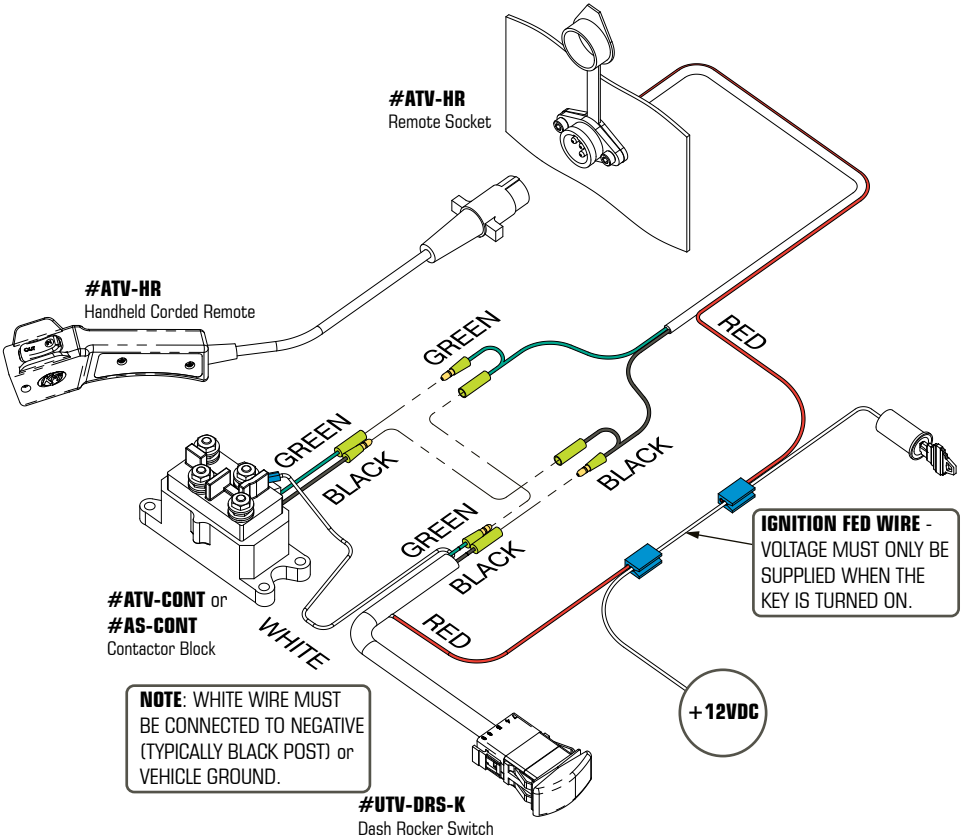

Cable Hook Stopper Installation and Use

1. Release winch and pull out approximately 2 feet of cable.
2. Assemble cable hook stopper as shown in diagram with the flat portion of the two halves resting against your fairlead. Tighten fasteners.
3. To stow hook, engage clutch and retract cable onto winch spool until hook is snug against the hook stopper and fairlead.
4. Position cable hook stopper at approx. 3/4 of the total line distance towards the hook while using your winch to help reduce whip back in the event of cable breakage.

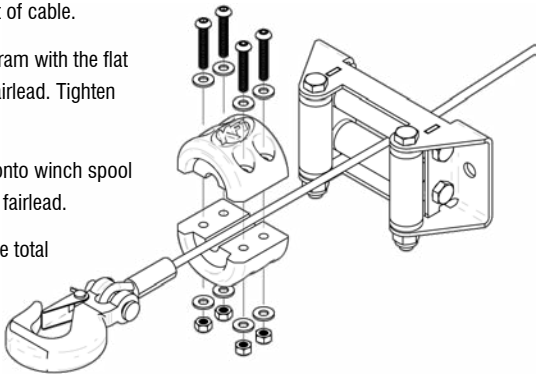

General Tips for Safe Operation

Your AS-50x winch is rated at 5,000 lbs. capacity in first layer (max) when spooling the first cable layer on the drum. Overloads can damage the winch, motor and/or cable.

The vehicle engine should be kept running during operation of the winch to minimize battery drain and maximize power and speed of the winch. If the winch is used for a considerable time with the engine off the battery may be drained and too weak to restart the engine.

Get to know your winch before you actually need to use it. We recommend that you set up a few test runs to familiarize yourself with rigging techniques, the sounds your winch makes under various loads, the way the cable spools on the drum, etc.

Inspect the cable and equipment before each use. A frayed or damaged cable should be replaced immediately. Use only manufacturer's identical replacement cable with the exact specifications.

Inspect the winch installation and bolts to ensure that all bolts are tight before each operation.

Store the remote control inside your vehicle in a place that it will not be damaged.

Any winch that appears to be damaged in any way, is found to be worn, or operates abnormally MUST BE REMOVED FROM SERVICE UNTIL REPAIRED. It is recommended that the necessary repairs be made by a manufacturer's authorized repair facility.

Pull only on areas of the vehicle as specified by the vehicle manufacturer.

Only attachments and/or adapters supplied by the manufacturer are to be used.

Self Recovery

Locate a suitable anchor such as a strong tree trunk or boulder. Always use a sling as an anchor point.

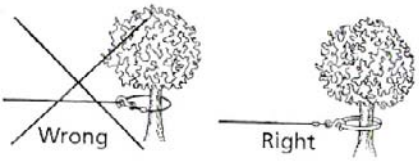

Your winch is equipped with a roller fairlead to help guide the cable and to reduce binding on short side pulls.

Do not winch from an acute angle as the cable will pile up on one side of the drum causing damage to cable and the winch.

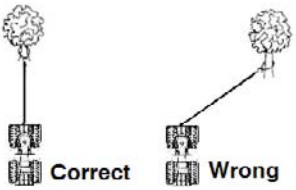

Short pulls from an angle can be used to straighten the vehicle. Long pulls should be done with the cable straight out from the winch/vehicle.

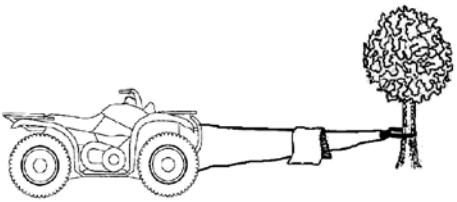

When pulling a heavy load, place a cable hook stopper, blanket or jacket over the cable five or six feet from the hook.

In the event of a cable snap it will dampen the snap back. For additional protection open the hood of the vehicle.

Winching Techniques

1. Take time to assess your situation and plan your pull.
2. Put on gloves to protect your hands.
3. Release the clutch and free-spool the winch; it's faster than using the switch and saves battery power.
4. Attach the hook strap to the clevis hook.
5. Pull out the cable to your desired anchor point using the hook strap.
6. Secure the clevis hook to the anchor point: Sling, chain or snatch block. Do not attach the hook back onto the cable.
7. Engage the clutch.
8. Start your engine to ensure power is being replenished to the battery.
9. Power in the cable guiding the cable under tension to draw up the slack in the cable. Once the cable is under tension, stand clear. Never step over the cable.
10. Double check your anchors and make sure all connections are secure.
11. Inspect the cable. Make sure there are at least 5 wraps of cable around the winch drum.
12. Place a Cable Hook Stopper over the cable approximately 5 to 6 feet from the hook.
13. Clear the area. Make sure all spectators stand clear and that no one is directly in front or behind the vehicle or anchor point.
14. Begin winching. Be sure that the cable is winding evenly and tightly around the drum. The vehicle that is being winched can be slowly driven to add assistance to the winching process. Avoid shock loads; keep the cable under tension.
15. The vehicle to be winched should be placed in neutral and the parking brake released. Only release the loads to the winch. This can damage the winch, cable and vehicle.
16. The winch is meant for intermittent use. Under full load with a single line rig do not power in for more than a minute without letting the motor cool down for a few minutes and then resume the winching operation.
17. The winching operation is complete once the vehicle is on stable ground and is able to drive under its own power.
18. Secure the vehicle. Be sure to set the brakes and place the vehicle in park.
19. Release the tension on the cable. The winch is not meant to hold the vehicle for long periods of time.
20. Disconnect the cable from the anchor.
21. Rewind the cable. Make sure that any cable already on the drum has spooled tightly and neatly. If not, draw out the cable and re-spool from the point where the cable is tight.
22. Keep your hands clear of the winch drum and fairlead as the cable is being drawn in.
23. Secure the hook and hook strap.
24. Disconnect the remote control and store in a clean, dry place.
25. Clean and inspect connections and mounting hardware for next winching operation.
26. Never use the winch as a tie down.
27. Use brake pedal when under full tension.

Synthetic Cable Usage

Exercising proper care to prolong the usable life of a Synthetic Cable is your responsibility.

1. **Minimize Cable Abrasion** – Use the supplied protective sheath when the cable comes in contact with trees, rocks, or other sharp abrasive objects. The sheath is design to stay in position while the cable slips through it during use.
2. **Keep the Cable Clean** – Dirt, sand, and debris will cause abrasion. Use the protective sheath to cover the cable on the spool once the cable is in the stowed position.
3. **Avoid Sharp Bends** – If the cable is positioned at a sharp angle, the strength under load will decrease and cable damage or failure may result.
4. **Correct Spool Winding** – When re-spooling cable without a load, it is always better to have someone apply a load to the line while you reel in evenly. Re-spool the cable evenly and tightly on the drum. If cable is wound loosely, it may become wedged under adjacent layers and bind.
5. **DO NOT Grease or Oil** – Do not lubricate synthetic cable with greases or oils. Keep grease and oil away at all times.

Snow Plow Usage

Winches are commonly used to lift a Snow Plow System, but precautions and correct usage are required to prevent costly damage.

NOTICE Follow these precautions before using your Winch to lift a Plow. Failure to do so may result in damage to your winch or vehicle frame.

1. Stop the plow before full lift height - failure to do so will cause the winch to pull against itself (i.e. “bottom out”) and will cause damage to the winch components, your plow frame and your vehicle frame.

NOTICE Winch damage such as stripped gears, broken housings and bent or damaged parts caused by exceeding your plow’s lift height are not covered under warranty.

2. Do not continue to hold the Spool In button to power the winch while reversing your vehicle or other instances where the operator may become distracted while plowing.

Protective Sheath

3. Repeated spooling of a short length of cable will increase heat and friction where the rollers contact the synthetic cable. Minimize wear and the possibility of premature failure by **SLIDING THE PROTECTIVE SHEATH BACK UP THE SPOOL**.
4. When the plow system is the in the DOWN position, freespool out enough additional cable that you can slide the sheath back up the spool (approx 7-8 ft more). Push the sheath back up thru the optional Cable Hook Stopper and the rollers. Re-spool the winch.
5. Be sure that the sheath completely clears the roller fairlead once spooled tightly onto the winch. The sheath will wrap around several layers on the spool. Reposition the sheath back near the hook when not used for plowing.

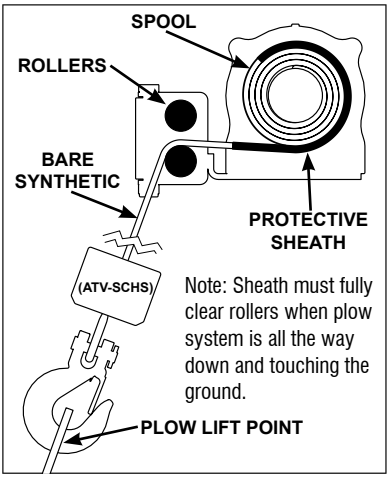

MAINTENANCE

The owner/operator is responsible for all periodic maintenance.

Complete all scheduled maintenance in a timely manner. Correct any issue before operating the winch.

WARNING Never operate a damaged or defective winch.

WARNING Improper maintenance will void your warranty.

NOTICE For service or parts assistance, contact our help line at 1-877-346-2050.

Motor

Periodically when not used very often, or after wet / damp conditions. Be sure to run the motor in free spool until the motor is warm. This helps dry out any moisture and condensation trapped inside the housing.

Lubrication

All moving parts within the Electric Winch have been Lubricated using high temperature lithium grease at the factory. No internal lubrication is required under normal conditions.

If the winch is subjected to extreme conditions lubrication may be required using a high temperature lithium grease. Retract Cable Assembly onto drum being careful not to allow kinking or over heating of the winch.

NOTICE Do NOT attempt to lubricate or grease the synthetic cable. Grease and oil will attract dirt and debris which cause abrasion.

Synthetic Cable Inspection

Periodically, inspect the synthetic cable for wear. When new, it will have a smooth finish (see Figure A).

(A) New Cable

After normal use, the outer surface will appear slightly fuzzy (see Figure B). This is expected and protects the underlaying fibers.

(B) Slight Fuzz

Once approximately 25% of the outer fibers show wear (see Figure C), the cable must be replaced.

(C) 25% Frayed

Inspect the inner and outer fibers by compressing the cable (see Figure D).

(D) Compressed

Look for powdered fiber or abrasion (signs of internal wear). Consider the amount of wear on the internal fibers when determining the percent of wear for replacement.

(E) Glazed

Glossy or glazed sections (see Figure E) in the cable are usually caused by compression, such as the cable being wound on the drum or through a pulley block. This is considered normal.

NOTICE If you compress (see Figure D) a glazed section of cable (see Figure E) and it remains hardened, then the cable has suffered heat damage and must be replaced.

WARNING Sharp edges and rough surfaces will shorten cable life. Inspect the cable and protective sheath before use. Replace cable immediately if it has cut strands, fused or melted fibers, odd stiff sections, chemical contamination, flat areas, or lumps that cannot be eliminated after flexing the cable.

Cable Assembly Replacement

It is recommended that any modifications be performed by a manufacturer's authorized repair facility, and that only manufacturer-supplied parts be used

1. Rotate the clutch cap to the "Release" position.
2. Extend Cable Assembly to its full length. Note how the existing cable is connected to the inside of the drum.
3. Remove old Cable Assembly and attach new one.
4. Rotate the clutch cap to the "Engage" position.

NOTICE Inspect cable before and after each use. If cable becomes frayed it must be replaced.

SPECIFICATIONS

Performance:

Rated Pull ..... 5,000 lb (2268 kg)

Gear Reduction Ratio 180:1

Motor.....Permanent Magnet, 1.22 HP (DC 12V)

Drum Size..... 1.75 x 3.19 in. (44.5 x 81 mm)

Cable Dimensions .... 15/64 in. x 38 ft. (6.0mm x 11.6m)

Net Weight ..... 26.0 lb. (11.8 kg)

Mounting Bolt Pattern.....
4.88 in. x 3.00 in. (12.4 cm x 7.6 cm)

Overall Dimensions .....
13.90 in. (L) x 4.45 in. (W) x 4.76 in. (H)
(35.3 cm x 11.3 cm x 12.1 cm)

Line Speed and Motor Current (First Layer)							
Line Pull	LB	0	1500	2500	3500	4500	5000
	KG	0	680	1134	1588	2041	2268
Line Speed (12 VDC)	FPM	12.46	9.8	8.2	6.8	4.5	3.0
	MPM	3.8	3.0	2.5	2.1	1.4	0.9
Max Current	A	30	75	105	140	200	240
Run Time *	Minutes	1	1	1	1	1	1
Cooling Time **	Minutes	5	5	5	5	5	5

** If the motor becomes uncomfortably hot to the touch, stop winching immediately and let it cool down for 5 minutes. Do not pull for more than one minute at or near the rated load.*

*** Electric winches are designed and made for intermittent use and should not be used in constant duty applications.*

Line Pull and Cable Capacity Per Layer						
Layers of Cable on Drum		1	2	3	4	5
Rated Line Pull	LB	5000	4040	3389	2919	2563
	KG	2268	1833	1537	1324	1163
Cable Capacity	FT	6.6	15.1	24.9	36.7	38
	M	2.0	4.6	7.6	11.2	11.6

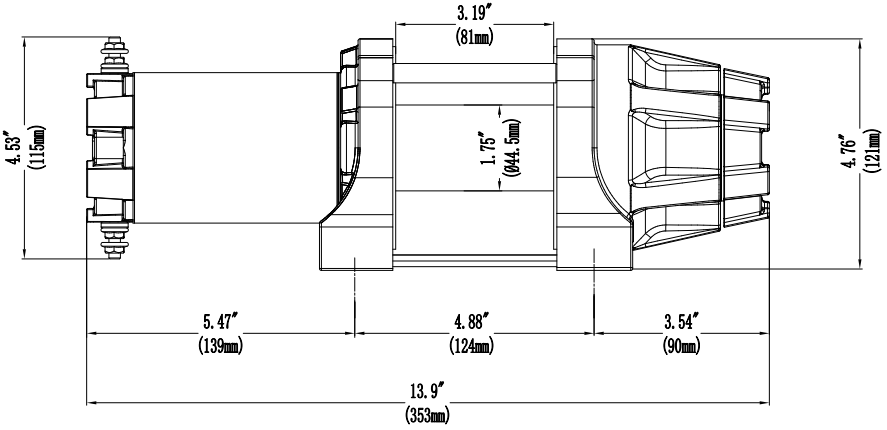

Parts Diagram

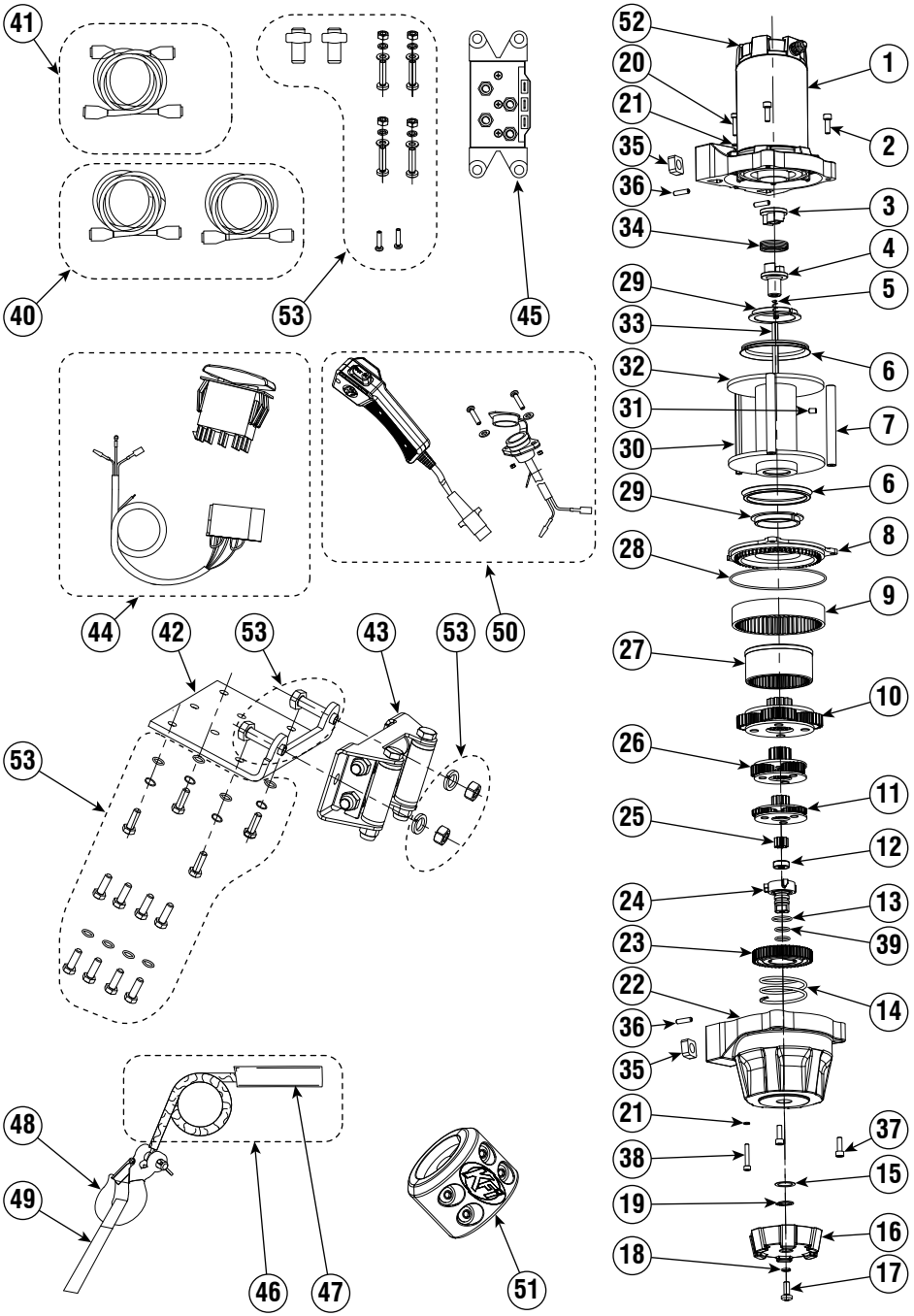

Parts List

#	Part Number	Description	Qty
1	MOTOR-AS50	Motor Assembly	1
2	HW-0023-B	Screw M5 x 16 Socket	2
3	WP-0026	Coupling, I	1
4	WP-0055	Coupling, II	1
5	WP-0079	Spring, Shaft	1
6	WP-0061	Delf-seal Packing	2
7	WP-0082	Tie Bar Ø10 x 85	2
8	WP-0054	Clutch Cover, Assault	1
9	WP-0068	Gear Ring, I	1
10	WP-0065	Gear Carrier Asm, Output	1
11	WP-0064	Gear Carrier Asm, Input	1
12	WP-0078	Bearing 606 Sealed	1
13	WP-0077	O-Ring Ø19 x 2.4	1
14	WP-0085	Spring, Clutch	1
15	HW-0024	Washer SS Ø16	1
16	WP-0002	Clutch Cap, Assault	1
17	HW-0007-B	Screw M6 x 16 Phillips	1
18	HW-0006-B	Washer Ø6 Lock	1
19	HW-0004	Circlip Ø15	1
20	HW-0025-B	Screw M4 x 20 Socket	1
21	HW-0020-B	Lock Washer Ø4	2
22	WP-0067	Gear Housing	1
23	WP-0053	Cam, Clutch Gear	1
24	WP-0052	Bushing, Axis Support	1
25	WP-0084	Gear, Input, Sun	1
26	WP-0063	Gear Carrier Asm	1
27	WP-0069	Gear Ring, II	1
28	WP-0075	O-Ring Ø100 x 1.9	1
29	WP-0062	Bushing, Drum	2
30	WP-0074	Hex Tie Bar 6 x 87	1
31	WP-0025	Set Screw M5 x 8	1
32	WP-0056	Drum, Steel, Standard	1
33	WP-0070	Shaft, Hexagon, H6 x 143	1
34	WP-0027	Spring, Coupling	1
35	WP-0049	Square Nut	4
36	WP-0050	Pin, Spring, Ø3 x 14	4
37	HW-0026-B	Screw M5 x 18 Socket	2
38	HW-0019-B	Screw M4 x 25 Socket	2
39	WP-0076	O-Ring Ø13 x 2	2
40	SE-WIRES-UTV-WIN	Wiring, Winch, UTV	1
40.1	WP-0092	Terminal Protector	4

#	Part Number	Description	Qty
41	SE-WIRES-UTV-BAT	Wiring, Battery, UTV	1
41.1	WP-0092	Terminal Protector	4
42	100495	Bracket, Fairlead, Standard	1
43	SE-RF	Roller Fairlead, Stealth	1
44	UTV-DRS-K	UTV Dash Rocker Switch Kit	1
45	AS-CONT	Contactor, Assault	1
46	SYN23-S38	Cable, Synthetic, 15/64" x 38ft	1
47	UTV-RPS	Protective Sheath, Replacment	1
48	SE-HOOK	Clevis Hook, 1/4"	1
49	WP-0030-BLK	Hand Saver Strap, Black	1
50	ATV-HR	Hand Remote Asm	1
51	ATV-SCHS	Split Cable Hook Stopper	1
52	AS-CAPKIT	Motor End Cap Assembly	1
53	HK-500	Hardware Kit, Black	1
53.01	HW-0001	Wire Tap	2
53.02	HW-0014-B	Nut M6 Nylock	4
53.03	HW-0006-B	Washer Ø6 Lock	4
53.04	HW-0003-B	Washer Ø6	4
53.05	HW-0013-B	Bolt M6 x 25	4
53.06	HW-0015-B	Bolt M6 x 20	2
53.07	HW-0010-B	Bolt M10 x 20	2
53.08	HW-0011-B	Washer Ø10 Lock	2
53.09	HW-0012-B	Nut M10 Nylock	2
53.10	HW-0016-B	Washer Ø8	8
53.11	HW-0009-B	Washer Ø8 Lock	4
53.12	HW-0008-B	Bolt M8 x 25	4
53.13	HW-0018-B	Bolt M8 x 20	4
53.14	HW-0017-B	Bolt M8 x 30	4

TROUBLESHOOTING

Problem	Cause	Solution
Motor does not run, Contactor makes a click sound.	Incorrect Wiring	Check Winch Wiring Diagram, make sure all wires are correctly connected.
	Incorrect Wiring	Hand Remote / Mini Rocker Switch wires must be connected green to green and black to black.
	Loose battery cable connections	Hand tighten nuts on all cable connections.
	Motor Issue	Contact KFI Technical Support
	Water has entered motor	Allow to drain and dry. Run in short burst with load until completely dry.
	Brake Spring installed backwards	Contact KFI Technical Support.
Motor does not run, NO click sound from Contactor.	Incorrect Wiring	Check Winch Wiring Diagram, make sure all wires are correctly connected.
	Switch Ignition Wire	Check connection to an ignition fed source. Must supply 12V with the key on and vehicle running.
	Contactor malfunctioning	Contact KFI Technical Support.
	Switch malfunctioning	Contact KFI Technical Support.
Motor runs, Spool turns in one direction only.	Incorrect Wiring	Check wiring diagram, verify switch wires (black/green) are properly connected and making good contact.
	Defective or stuck Contactor	Tap contactor to loosen plungers.
	Defective Switch assembly	Replace Switch assembly.
	Contactor malfunctioning	Contact KFI Technical Support.
Motor runs, Spool does NOT turn.	Clutch not engaged	Rotate Clutch Cap to Engage.
	Broken Coupler / stripped Shaft	Replace Coupler or Shaft
Spool turns, but no movement from Cable	Cable not attached to Spool	Contact KFI Technical Support.
Motor runs slowly or without normal power.	Insufficient current or voltage.	The battery is weak, recharge. Run winch with vehicle motor running (battery should have a strong charge).
	Loose or corroded battery cable connections	Clean, tighten, or replace.
	Worn Brushes	Replace with End-Cap Kit (#AS-CAPKIT) Contact KFI Technical Support.
Motor overheating	Winch running time too long	Allow winch to cool down periodically.

For further support, contact:

KFI Tech Support

Mon-Thr 8:00 AM - 5:00 PM (CST/CDT)
Fri 7:00 AM - 1:00PM (CST/CDT)
Toll Free: 1-877-346-2050
tech@kfiproducts.com

KFI Products Website Support:

Common installation, maintenance, and troubleshooting guides are available on our website.

https://www.kfiproducts.com/support.html

WARRANTY

KAPPERS FABRICATING, INC.
2 YEAR LIMITED LIFETIME WARRANTY

Warranty Qualifications

Kappers Fabricating Inc. (KFI) will register this warranty upon receipt of your Warranty Registration Card and a copy of your sales receipt from one of KFI's resale locations as proof of purchase. Please submit your warranty registration and your proof of purchase within Fifteen (15) days of the date of purchase.

Repair/Replacement Warranty

KFI warrants to the original purchaser that mechanical components will be free of defects in material and workmanship for the usable lifetime of the product (180 days for commercial use); and electrical components will be free of defects in material and workmanship for (2) years (180 days for commercial use); from the original date of purchase. Transportation charges on product submitted for repair or replacement under this warranty are the sole responsibility of the purchaser. This warranty only applies to the original purchaser and is not transferable.

Do Not Return The Unit To The Place Of Purchase

Contact KFI's Technical Service and KFI will troubleshoot any issue via phone or e-mail. If the problem is not corrected by this method, KFI will, at its option, authorize evaluation, repair or replacement of the defective part or component at a KFI Service Center. KFI will provide you with a case number for warranty service. Please keep it for future reference. Repairs or replacements without prior authorization, or at an unauthorized repair facility, will not be covered by this warranty.

Warranty Exclusions

This warranty does not cover the following repairs and equipment:

Normal Wear

Winches need periodic parts and service to perform well. This warranty does not cover repair when normal use has exhausted the life of a part or the equipment as a whole.

Installation, Use and Maintenance

This warranty will not apply to parts and/or labor if this winch is deemed to have been misused, neglected, involved in an accident, abused, loaded beyond the winch's limits, modified, installed improperly or wired incorrectly to any electrical component. Normal maintenance is not covered by this warranty.

Other Exclusions

- The winch cable or synthetic cable.
- Cosmetic defects such as paint, decals, etc.
- Accessory parts such as storage covers.
- Misuse, abuse, neglect, acts of God, terrorism and causes beyond the control of KFI.
- Problems caused by parts that are not original Kappers Fabricating Inc. parts.
- Cable Stacking and Water Submersion or Damage Caused by Water.

Warranty Procedure

1. Contact KFI Technical support to acquire a Return Authorization (RA) number.
2. KFI may request additional materials (such as original sales receipt, date of purchase, technical details, or photos of Product condition) prior to issuing an RA number.
3. At the discretion of KFI, Buyer shall mail, ship, or otherwise deliver to KFI the Warrantied Product, at the address noted below.

Limits of Implied Warranty and Consequential Damage

Kappers Fabricating Inc. disclaims any obligation to cover any loss of time, use of this product, freight, or any incidental or consequential claim by anyone from using this winch. THIS WARRANTY IS IN LIEU OF ALL OTHER WARRANTIES, EXPRESS OR IMPLIED, INCLUDING WARRANTIES OF MERCHANTABILITY OR FITNESS FOR A PARTICULAR PURPOSE

A unit provided as an exchange will be subject to the warranty of the original unit. The length of the warranty governing the exchanged unit will remain calculated by reference to the purchase date of the original unit.

This warranty gives you certain legal rights which may change from state to state. Your state may also have other rights you may be entitled to that are not listed within this warranty.

Contact Information

Address

KFI Products
Winch Customer Service
P.O. BOX 32
721 SATA DRIVE
SPRING VALLEY, MN 55975

Corporate

KAPPERS FABRICATING, INC.
P.O. BOX 32
1015 INDUSTRIAL DR.
SPRING VALLEY, MN 55975

Customer Service

Mon - Thr 8:00 AM - 5:00 PM (CST/CDT)
Fri - 7:00 AM - 1:00 PM (CST/CDT)
Toll Free: 1-877-346-2050 Opt 1
Fax No: 1-507-346-2010
E-mail: sales@kfiproducts.com

Technical Service

Mon - Thr 8:00 AM - 5:00 PM (CST/CDT)
Thr - 7:00 AM - 1:00 PM (CST/CDT)
Toll Free: 1-877-346-2050 Opt 2
E-mail: tech@kfiproducts.com

Website

https://www.kfiproducts.com

1-877-346-2050

KFI PRODUCTS
P.O. BOX 32
721 SATA DRIVE
SPRING VALLEY, MN 55975

WWW.KFIPRODUCTS.COM

CORPORATE OFFICE:

KAPPERS FABRICATING, INC.
P.O. BOX 32
1015 INDUSTRIAL DR.
SPRING VALLEY, MN 55975
USA

CE

MADE IN CHINA
©2025 KAPPERS FABRICATING, INC.

ASSAULT SERIES

SYNTHETIC CABLE

UTV/SxS WINCH

MODEL #AS-50WX

5,000 LB. (2268 KG)

OPERATOR'S MANUAL

TWO YEAR LIMITED WARRANTY KFI

READ AND SAVE THIS MANUAL. This manual contains important safety precautions which should be read and understood before operating the product. Failure to do so could result in serious injury. This manual should remain with the product. Specifications, descriptions, and illustrations in this manual are as accurate as known at the time of publication, but are subject to change without notice.

Place serial label here for reference.

SERIAL NO. LABEL

Support:

1-877-346-2050

or visit **www.kfiproducts.com**

Made in China - REV 20250224

KFI Products - Kappers Fabricating, Inc., Spring Valley, MN USA

TABLE OF CONTENTS

Introduction **1**
Accessories 1
This Manual 1
Safety Definitions **1**
Important Safety Instructions **2**
Controls and Features **4**
Installation **5**
Mount the Winch 5
Winch Assembly - Generic Install 5
Mount the Contactor 6
Install UTV Dash Mounted Rocker Switch 6
Mount the Hand Remote Socket 6
Wiring the Winch 7
Winch Wiring Diagram 8
Motor End Terminal Rotation 8
Controller Wiring Diagram 9
Cable Hook Stopper Installation and Use 9
General Tips for Safe Operation 10
Self Recovery 10
Winching Techniques 11
Synthetic Cable Usage 12
Snow Plow Usage 12
Protective Sheath 12
Maintenance **13**
Motor 13
Lubrication 13
Synthetic Cable Inspection 13
Cable Assembly Replacement 14
Specifications **15**
Performance: 15
Parts Diagram 16
Parts List 17
Troubleshooting **18**
Warranty **19**
Contact Information 20

INTRODUCTION

Congratulations on your purchase of a KFI winch. KFI researches and develops winches to strict specifications. With proper use and maintenance, this winch will bring years of satisfying service.

Accessories

Kappers Fabricating, Inc. manufactures, purchases, and sells accessories designed to help you get the most from your purchase. To find out more about our products, visit our web site at:

www.kfiproducts.com

This Manual

Every effort has been made to ensure the accuracy and completeness of information in this manual. We reserve the right to change, alter, and or improve the product and this document at any time without prior notice.

Record the model as well as date and place of purchase for future reference. Have this information available when ordering parts and when making technical or warranty inquiries.

KFI TECHNICAL SUPPORT TEAM
1-877-346-2050
MODEL NUMBER
AS-50wx
SERIAL NUMBER
DATE OF PURCHASE
PURCHASE LOCATION

SAFETY DEFINITIONS

The purpose of safety symbols is to attract your attention to possible dangers. The safety symbols, and their explanations, deserve your careful attentions and understanding. The safety warnings do not by themselves eliminate any danger. The instructions or warnings they give are not substitutes for proper accident prevention measures.

DANGER DANGER indicates a hazardous situation which, if not avoided, will result in death or serious injury.

WARNING WARNING indicates a hazardous situation which, if not avoided, could result in death or serious injury.

CAUTION CAUTION indicates a hazardous situation which, if not avoided, could result in minor or moderate injury.

NOTICE NOTICE indicates information considered important, but not hazard-related (e.g. messages relating to property damage or physical injury).

IMPORTANT SAFETY INSTRUCTIONS

WARNING Cancer and Reproductive Harm - www.P65Warnings.ca.gov

WARNING Read this manual thoroughly before operating the winch. Failure to follow instructions could result in serious injury or death.

WARNING Do not exceed the rated capacity.

DANGER Do not use this winch for lifting or moving people or animals.

DANGER Keep yourself and others a safe distance to the side of the cable when under tension.

DANGER Never step over a cable or near a cable under load.

WARNING The cable may break before the motor stalls. For heavy loads at or near rated capacity, use a pulley block/snatch block to reduce the load on the cable.

WARNING Do not move the vehicle to pull a load (towing) on the winch cable. This could result in cable breakage.

WARNING Pull only on area of the vehicle as specified by the vehicle manufacturer.

WARNING Do not use the winch to secure or hold a vehicle for a long period of time. Do not use the winch to secure a vehicle for transport.

WARNING Disconnect the remote control and battery leads when not in use for extended periods.

WARNING Avoid “shock loads” by using the control switch intermittently to take up slack in the cable. “Shock loads” can far exceed the rated capacity for the winch cable and drum.

Do not accelerate your vehicle while winching. Loss of traction can cause a shock load on the cable. Do not use cable as a pull strap.

WARNING Batteries contain acid and produce explosive gases. Keep sparks, flames and cigarettes away from batteries at all times. Wear safety glasses and protect the eyes at all times. Do not lean over the batteries during operation.

WARNING Do not use as a hoist. Do not use for overhead lifting.

WARNING When re-spooling the cable, ensure that the cable spools in the under-wind position with the cable entering the drum from the bottom, not the top.

To re-spool correctly, and while wearing gloves, keep a slight load on the cable while pushing the remote button to draw in the cable. Walk toward the winch not allowing the cable to slide through your hands. Do not let your hands get within 12 in. of the winch while re-spooling. Turn off the winch and repeat the procedure until a few feet of cable are left. Disconnect the remote control and finish spooling by rotating the drum by hand with the clutch disengaged. Keep hands clear of the fairlead and drum while the winch is under power.

CAUTION Use gloves to protect hands when handling the cable. Never let the cable slide through your hands.

CAUTION Do not wrap the cable around any object and hook it back onto itself.

CAUTION Apply blocks to the wheels of the vehicle when on an incline.

CAUTION Duration of winching pulls should be kept as short as possible.

If the motor becomes uncomfortably hot to the touch, stop winching immediately and let it cool down for a few minutes. Do not pull for more than one minute at or near the rated load.

CAUTION If the motor stalls, do not maintain power to the winch.

Electric winches are designed and made for intermittent use and should not be used in constant duty applications.

CAUTION Never release the free spool clutch when there is a load on the winch.

CAUTION Use the Hand-Saver strap when handling the winch hook for spooling or unspooling the cable.

CONTROLS AND FEATURES

Read this operator's manual before operating your winch. Familiarize yourself with the location and function of the control features. Save this manual for future reference.

Winch

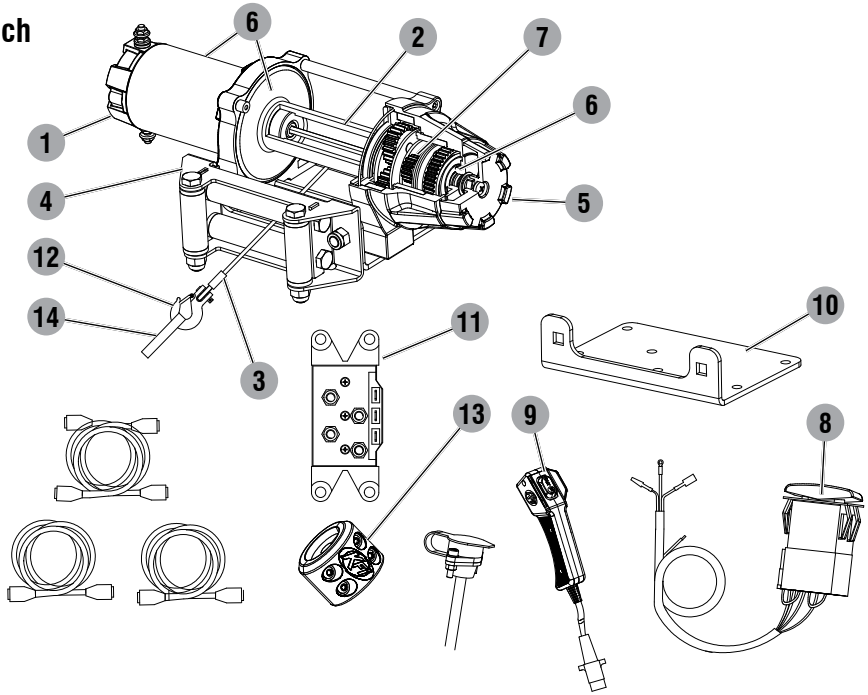

1. **Motor** – 1.22 HP 12V DC motor provides power to the planetary gear mechanism.
2. **Winch Drum** – The winch drum is the cylinder on which the cable is stored. It can feed or wind the cable depending on the switch assembly.
3. **Synthetic Cable** – 15/64 in. x 50 ft. Synthetic cable designed specifically for load capacity of 5,000 lbs. (47 usable feet with five wraps on the drum). The synthetic cable feeds onto the drum in the "under wind" position through the roller fairlead (4) and is looped at the end to accept the clevis hook pin (12).
4. **Roller Fairlead** – When using the winch at an angle the roller fairlead acts to guide the synthetic cable onto the drum and minimize damage to the cable from abrasion on the winch mount or bumper.
5. **Free Spooling Clutch** – The clutch allows the operator to manually disengage ("Release") the spooling drum from the gear train. Engaging the clutch ("Engage") locks the winch into the gear system.
6. **Braking System** – Braking action is automatically applied to the winch drum when the winch motor is stopped or there is a load on the cable.
7. **Planetary Gear System** – The reduction gears convert the winch motor power into extreme pulling forces. This system allows high torque while maintaining compact size and light weight.
8. **UTV Dash Mounted Rocker Switch** – Premium look & quality dash mounted switch for easy access.
9. **Hand Held Remote** – Hand held switch with a remote socket for powering the cable in or out of your winch drum.

10. **Fairlead Mount** – Adapter to mount the winch and fairlead for utility applications.

11. **Contactor** – Power from the vehicle battery flows through the weather sealed solenoid switch before being directed to the winch motor.

12. **Clevis Hook** – Provides a means for connecting the looped ends of cables to an anchor.

13. **Cable Hook Stopper** – Protects the rollers, motors, and gears.

14. **Hand Saver Strap** – Used to assist cable feed.

INSTALLATION

This KFI 5,000 lb winch is designed with a bolt pattern that is standard for this class of winch. Many winch mounting kits are available that utilize this bolt pattern for the most popular ATVs and UTVs. You can find most of the ATV/UTV winch mounts on our website (www.kfiproducts.com).

Mount the Winch

WARNING Before starting to install this winch, disconnect the vehicle ground and positive leads from the battery.

1. Install the winch and fairlead with the supplied hardware per the instructions provided with the model specific winch mounting kit or prepare a flat, secure mounting location for the winch.

CAUTION Mounting bolts must be SAE Grade 5 or better and torqued to 17 ft. lbs.

NOTICE This kit includes mounting bolts with different lengths for fastening the winch (M8 x 20, 25, and 30mm long). Use the length that best fits your mounting application. Refer to vehicle specific mount instructions for more information.

CAUTION If you choose not to use a model specific mounting kit, you will need to drill holes in the structural support of the vehicle. Be certain that your structural support is sufficient for the pulling forces of this winch.

2. Attach the winch using supplied M8 x 25mm or 30mm bolts and washers thru the fairlead bracket or model specific winch mount and into the winch.

3. Disengage the clutch by rotating the clutch cap to the RELEASE position. Release the synthetic cable and pull through the roller fairlead.

4. Attach the clevis hook to the cable and the hand saver strap to the clevis hook.

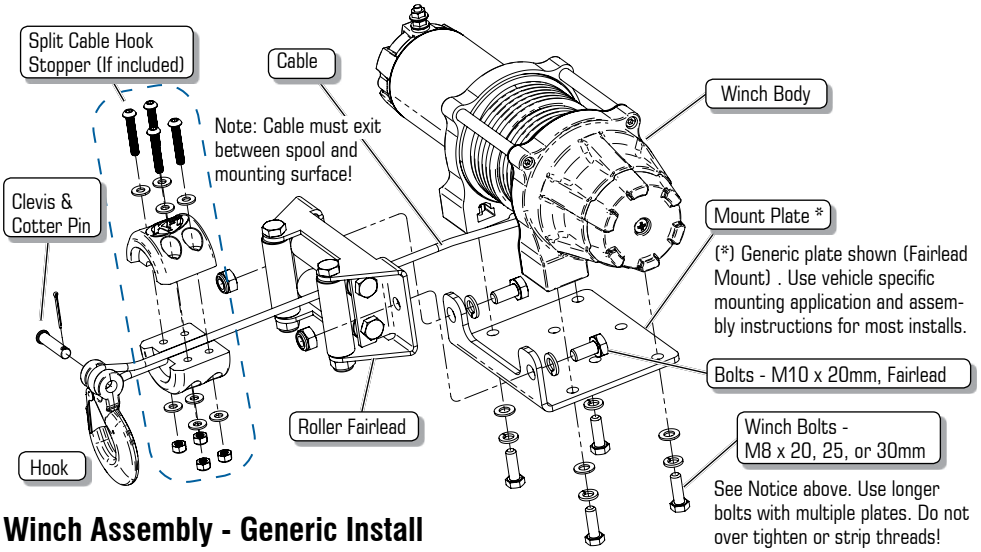

Winch Assembly - Generic Install

Mount the Contactor

5. Find a location for the contactor. If the model specific mounting kit does not indicate a recommended contactor location, then it is recommended that the contactor be mounted close to the battery in a clean dry location. Be certain the location you choose allows for sufficient clearance form all metal components. Drill mounting holes if required. Once a location is found, do not install until all wiring is completed.

Install UTV Dash Mounted Rocker Switch

6. Most UTV's & SxS's have a predefined switch location that is scored or marked for mounting and requires finish cutting with a knife.

7. Use the cut-out dimensions shown below to cut the switch location pattern if your dash doesn't have a predefined knockout or area.

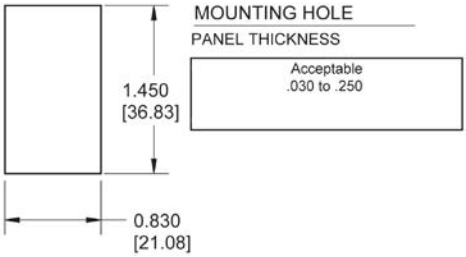

8. Once your switch is mounted you can route wires back to the contactor location.

9. Splice the end of the red wire to an ignition controlled (keyed) power source using the supplied wire splice. You may need to use a test light or multimeter to locate a suitable wire. The wire should only have power when the key is in the ON position.

Mount the Hand Remote Socket (optional)

10. Determine a mounting location for the Hand Remote socket. Be certain the area behind the selection location is clear.

11. Drill three holes as shown in the following figure and install using supplied hardware. You can also use the rubber cap attached to the remote socket as a template.

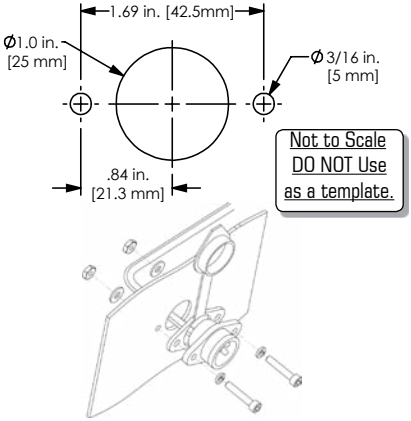

12. Once your remote socket is mounted, you may route wires back to the contactor location.

13. Splice the end of the red wire to an ignition controlled (keyed) power source using the supplied wire splice. You may need to use a test light or multimeter to locate a suitable wire. The wire should only have power when the key is in the ON position.

14. Secure the wires with supplied cable ties.

Wiring the Winch

CAUTION Never route electrical wires across any sharp edges, through or near moving parts, or near parts that become hot.

15. Connect the yellow and blue wires to the motor terminals on the winch. Torque the nuts on the motor to 5.7 N-m (50 in lbs) Route the opposite ends to the contactor location. (See diagram on page 8).
16. Connect the yellow and blue wires to the contactor block (yellow to yellow, blue to blue). DO NOT tighten nuts. (See diagram page 8).
17. Connect the red and black wires to your contactor block (red to red, black to black). DO NOT tighten nuts. Route the opposite ends to the battery location (See diagram page 8).
18. Connect the mini rocker switch to the contactor block (black to black, green to green). (See diagram on page 9).
19. Once all wiring is connected to the contactor, finish mounting it to the contactor location using supplied M6 hardware (See diagram page 8).

WARNING Failure to follow specific wiring instructions may result in damage to your wiring system or equipment.

NOTICE Depending on the location of the contactor, you may need to use an alternate winch wiring configuration. Please see the "Alternate Winch Wiring Diagram" available on: www.kfiproducts.com

20. Torque the contactor terminal nuts to 4.5 N-m (40 in lbs) Do NOT over tighten.
21. Place all terminal boots over terminals and secure all cables with zip ties or electrical tape.

NOTICE If you are installing the hand remote along with the mini rocker switch, you will need to connect the remote socket to the contactor and then the mini rocker switch to the remote socket (see diagram on page 9).

22. Connect the battery leads from the contactor to the vehicle's battery (black to black, and red to red, see diagram on page 8).
23. Check for proper drum rotation. Turn the clutch cap to the RELEASE position. Pull out some cable from the drum and then turn the clutch cap to the ENGAGE position to engage the gears. Make sure your vehicle is running and press the cable out button on the switch. If the spool is turning and releasing more cable, then your connections are accurate. If the spool is turning and collecting more cable, then reverse the leads on the motor. Repeat and check rotation.

CAUTION Battery cables should not be drawn taut. Leave some slack for cable movement.

NOTICE Always hold the bottom nut with a wrench while tightening motor wire terminals. Do not allow the bottom nut to spin, else you may damage the end cap.

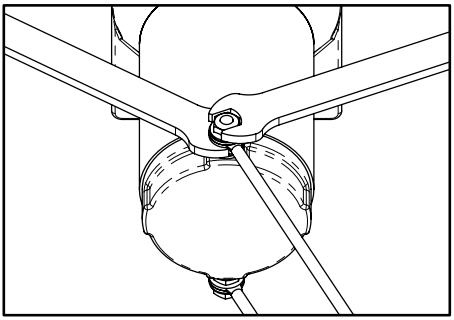

Proper Terminal Tightening

Winch Wiring Diagram

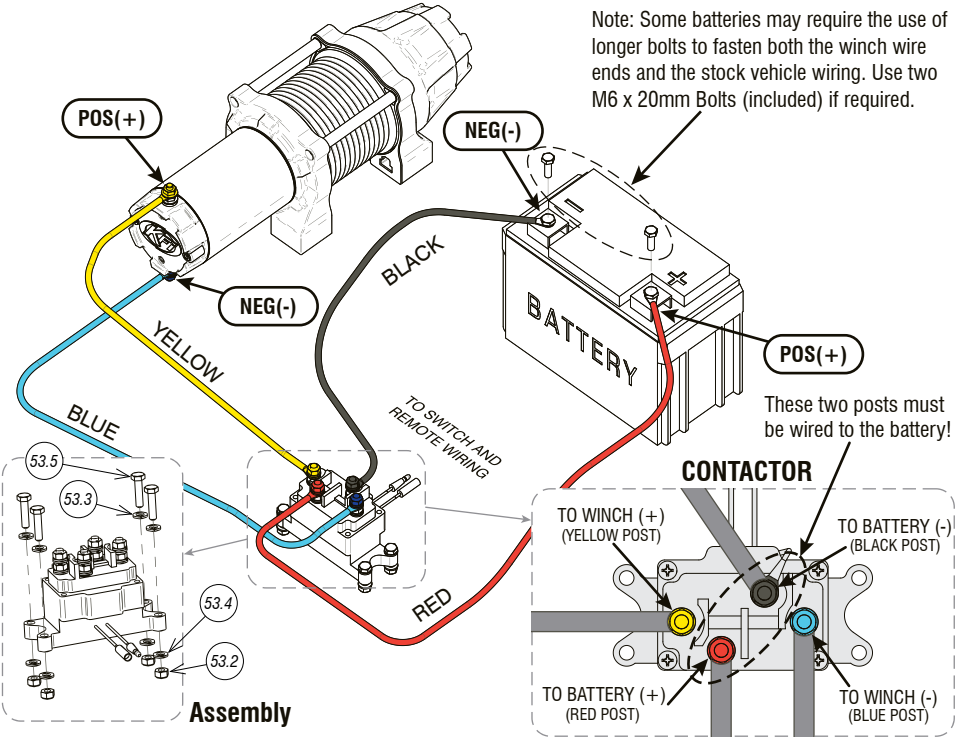

Motor End Terminal Rotation

With some applications, the motor terminals may need to be rotated to avoid interference with other components. If rotation is required please give us a call at 1-877-346-2050 for instructions or visit our website at www.kfiproducts.com and look in the support section.

STANDARD → **45° ROTATION** → **90° ROTATION**

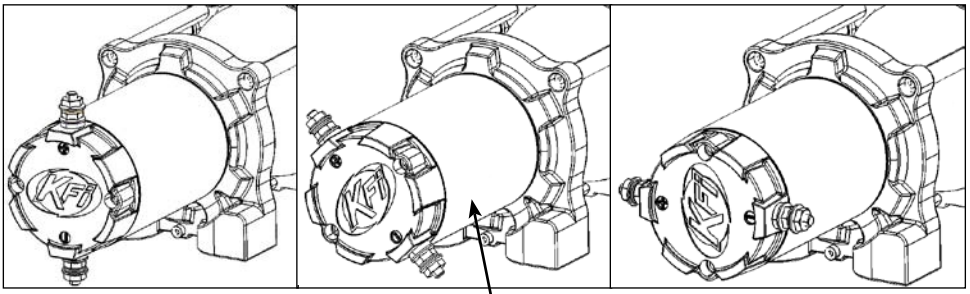

Note: Motor casing rotates with End Cap

Controller Wiring Diagram

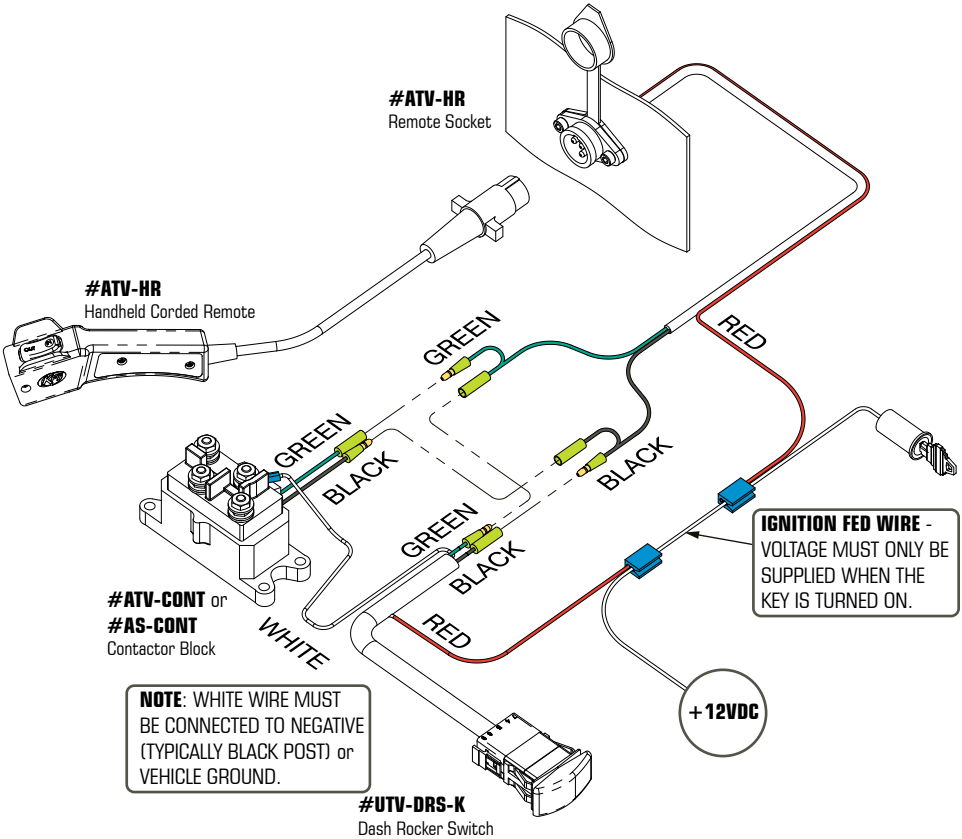

Cable Hook Stopper Installation and Use

1. Release winch and pull out approximately 2 feet of cable.
2. Assemble cable hook stopper as shown in diagram with the flat portion of the two halves resting against your fairlead. Tighten fasteners.
3. To stow hook, engage clutch and retract cable onto winch spool until hook is snug against the hook stopper and fairlead.
4. Position cable hook stopper at approx. 3/4 of the total line distance towards the hook while using your winch to help reduce whip back in the event of cable breakage.

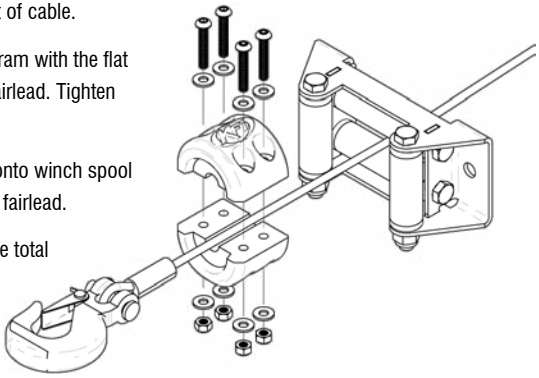

General Tips for Safe Operation

Your AS-50wx winch is rated at 5,000 lbs. capacity in first layer (max) when spooling the first cable layer on the drum. Overloads can damage the winch, motor and/or cable.

The vehicle engine should be kept running during operation of the winch to minimize battery drain and maximize power and speed of the winch. If the winch is used for a considerable time with the engine off the battery may be drained and too weak to restart the engine.

Get to know your winch before you actually need to use it. We recommend that you set up a few test runs to familiarize yourself with rigging techniques, the sounds your winch makes under various loads, the way the cable spools on the drum, etc.

Inspect the cable and equipment before each use. A frayed or damaged cable should be replaced immediately. Use only manufacturer's identical replacement cable with the exact specifications.

Inspect the winch installation and bolts to ensure that all bolts are tight before each operation.

Store the remote control inside your vehicle in a place that it will not be damaged.

Any winch that appears to be damaged in any way, is found to be worn, or operates abnormally MUST BE REMOVED FROM SERVICE UNTIL REPAIRED. It is recommended that the necessary repairs be made by a manufacturer's authorized repair facility.

Pull only on areas of the vehicle as specified by the vehicle manufacturer.

Only attachments and/or adapters supplied by the manufacturer are to be used.

Self Recovery

Locate a suitable anchor such as a strong tree trunk or boulder. Always use a sling as an anchor point.

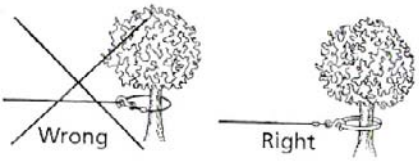

Your winch is equipped with a roller fairlead to help guide the cable and to reduce binding on short side pulls.

Do not winch from an acute angle as the cable will pile up on one side of the drum causing damage to cable and the winch.

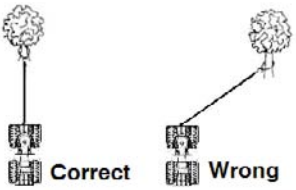

Short pulls from an angle can be used to straighten the vehicle. Long pulls should be done with the cable straight out from the winch/vehicle.

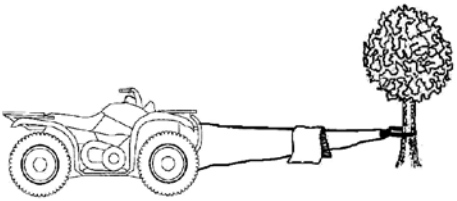

When pulling a heavy load, place a cable hook stopper, blanket or jacket over the cable five or six feet from the hook.

In the event of a cable snap it will dampen the snap back. For additional protection open the hood of the vehicle.

Winching Techniques

1. Take time to assess your situation and plan your pull.
2. Put on gloves to protect your hands.
3. Release the clutch and free-spool the winch; it's faster than using the switch and saves battery power.
4. Attach the hook strap to the clevis hook.
5. Pull out the cable to your desired anchor point using the hook strap.
6. Secure the clevis hook to the anchor point: Sling, chain or snatch block. Do not attach the hook back onto the cable.
7. Engage the clutch.
8. Start your engine to ensure power is being replenished to the battery.
9. Power in the cable guiding the cable under tension to draw up the slack in the cable. Once the cable is under tension, stand clear. Never step over the cable.
10. Double check your anchors and make sure all connections are secure.
11. Inspect the cable. Make sure there are at least 5 wraps of cable around the winch drum.
12. Place a Cable Hook Stopper over the cable approximately 5 to 6 feet from the hook.
13. Clear the area. Make sure all spectators stand clear and that no one is directly in front or behind the vehicle or anchor point.
14. Begin winching. Be sure that the cable is winding evenly and tightly around the drum. The vehicle that is being winched can be slowly driven to add assistance to the winching process. Avoid shock loads; keep the cable under tension.
15. The vehicle to be winched should be placed in neutral and the parking brake released. Only release the loads to the winch. This can damage the winch, cable and vehicle.
16. The winch is meant for intermittent use. Under full load with a single line rig do not power in for more than a minute without letting the motor cool down for a few minutes and then resume the winching operation.
17. The winching operation is complete once the vehicle is on stable ground and is able to drive under its own power.
18. Secure the vehicle. Be sure to set the brakes and place the vehicle in park.
19. Release the tension on the cable. The winch is not meant to hold the vehicle for long periods of time.
20. Disconnect the cable from the anchor.
21. Rewind the cable. Make sure that any cable already on the drum has spooled tightly and neatly. If not, draw out the cable and re-spool from the point where the cable is tight.
22. Keep your hands clear of the winch drum and fairlead as the cable is being drawn in.
23. Secure the hook and hook strap.
24. Disconnect the remote control and store in a clean, dry place.
25. Clean and inspect connections and mounting hardware for next winching operation.
26. Never use the winch as a tie down.
27. Use brake pedal when under full tension.

Synthetic Cable Usage

Exercising proper care to prolong the usable life of a Synthetic Cable is your responsibility.

1. **Minimize Cable Abrasion** – Use the supplied protective sheath when the cable comes in contact with trees, rocks, or other sharp abrasive objects. The sheath is design to stay in position while the cable slips through it during use.
2. **Keep the Cable Clean** – Dirt, sand, and debris will cause abrasion. Use the protective sheath to cover the cable on the spool once the cable is in the stowed position.
3. **Avoid Sharp Bends** – If the cable is positioned at a sharp angle, the strength under load will decrease and cable damage or failure may result.
4. **Correct Spool Winding** – When re-spooling cable without a load, it is always better to have someone apply a load to the line while you reel in evenly. Re-spool the cable evenly and tightly on the drum. If cable is wound loosely, it may become wedged under adjacent layers and bind.
5. **DO NOT Grease or Oil** – Do not lubricate synthetic cable with greases or oils. Keep grease and oil away at all times.

Snow Plow Usage

Winches are commonly used to lift a Snow Plow System, but precautions and correct usage are required to prevent costly damage.

NOTICE Follow these precautions before using your Winch to lift a Plow. Failure to do so may result in damage to your winch or vehicle frame.

1. Stop the plow before full lift height - failure to do so will cause the winch to pull against itself (i.e. “bottom out”) and will cause damage to the winch components, your plow frame and your vehicle frame.

NOTICE Winch damage such as stripped gears, broken housings and bent or damaged parts caused by exceeding your plow’s lift height are not covered under warranty.

2. Do not continue to hold the Spool In button to power the winch while reversing your vehicle or other instances where the operator may become distracted while plowing.

Protective Sheath

3. Repeated spooling of a short length of cable will increase heat and friction where the rollers contact the synthetic cable. Minimize wear and the possibility of premature failure by **SLIDING THE PROTECTIVE SHEATH BACK UP THE SPOOL**.
4. When the plow system is the in the DOWN position, freespool out enough additional cable that you can slide the sheath back up the spool (approx 7-8 ft more). Push the sheath back up thru the optional Cable Hook Stopper and the rollers. Re-spool the winch.
5. Be sure that the sheath completely clears the roller fairlead once spooled tightly onto the winch. The sheath will wrap around several layers on the spool. Reposition the sheath back near the hook when not used for plowing.

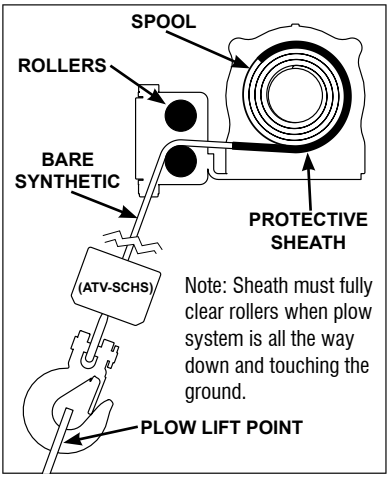

MAINTENANCE

The owner/operator is responsible for all periodic maintenance.

Complete all scheduled maintenance in a timely manner. Correct any issue before operating the winch.

WARNING Never operate a damaged or defective winch.

WARNING Improper maintenance will void your warranty.

NOTICE For service or parts assistance, contact our help line at 1-877-346-2050.

Motor

Periodically when not used very often, or after wet / damp conditions. Be sure to run the motor in free spool until the motor is warm. This helps dry out any moisture and condensation trapped inside the housing.

Lubrication

All moving parts within the Electric Winch have been Lubricated using high temperature lithium grease at the factory. No internal lubrication is required under normal conditions.

If the winch is subjected to extreme conditions lubrication may be required using a high temperature lithium grease. Retract Cable Assembly onto drum being careful not to allow kinking or over heating of the winch.

NOTICE Do NOT attempt to lubricate or grease the synthetic cable. Grease and oil will attract dirt and debris which cause abrasion.

Synthetic Cable Inspection

Periodically, inspect the synthetic cable for wear. When new, it will have a smooth finish (see Figure A).

(A) New Cable

After normal use, the outer surface will appear slightly fuzzy (see Figure B). This is expected and protects the underlaying fibers.

(B) Slight Fuzz

Once approximately 25% of the outer fibers show wear (see Figure C), the cable must be replaced.

(C) 25% Frayed

Inspect the inner and outer fibers by compressing the cable (see Figure D).

(D) Compressed

Look for powdered fiber or abrasion (signs of internal wear). Consider the amount of wear on the internal fibers when determining the percent of wear for replacement.

(E) Glazed

Glossy or glazed sections (see Figure E) in the cable are usually caused by compression, such as the cable being wound on the drum or through a pulley block. This is considered normal.

NOTICE If you compress (see Figure D) a glazed section of cable (see Figure E) and it remains hardened, then the cable has suffered heat damage and must be replaced.

WARNING Sharp edges and rough surfaces will shorten cable life. Inspect the cable and protective sheath before use. Replace cable immediately if it has cut strands, fused or melted fibers, odd stiff sections, chemical contamination, flat areas, or lumps that cannot be eliminated after flexing the cable.

Cable Assembly Replacement

It is recommended that any modifications be performed by a manufacturer's authorized repair facility, and that only manufacturer-supplied parts be used

1. Rotate the clutch cap to the "Release" position.
2. Extend Cable Assembly to its full length. Note how the existing cable is connected to the inside of the drum.
3. Remove old Cable Assembly and attach new one.
4. Rotate the clutch cap to the "Engage" position.

NOTICE Inspect cable before and after each use. If cable becomes frayed it must be replaced.

SPECIFICATIONS

Performance:

Rated Pull ..... 5,000 lb (2268 kg)

Gear Reduction Ratio 180:1

Motor..... Permanent Magnet, 1.22 HP (DC 12V)

Drum Size..... 1.75 x 4.88 in. (44.5 x 81 mm)

Cable Dimensions .. 15/64 in. x 50 ft. (6.0mm x 15.24m)

Net Weight ..... 27.8 lb. (12.6 kg)

Mounting Bolt Pattern..... 6.6 in. x 3.00 in. (16.8 cm x 7.6 cm)

Overall Dimensions ..... 15.63 in. (L) x 4.45 in. (W) x 4.76 in. (H) (39.7 cm x 11.3 cm x 12.1 cm)

Line Speed and Motor Current (First Layer)							
Line Pull	LB	0	1500	2500	3500	4500	5000
	KG	0	680	1134	1588	2041	2268
Line Speed (12 VDC)	FPM	12.46	9.8	8.2	6.8	4.5	3.0
	MPM	3.8	3.0	2.5	2.1	1.4	0.9
Max Current	A	30	75	105	140	200	240
Run Time *	Minutes	1	1	1	1	1	1
Cooling Time **	Minutes	5	5	5	5	5	5

** If the motor becomes uncomfortably hot to the touch, stop winching immediately and let it cool down for 5 minutes. Do not pull for more than one minute at or near the rated load.*

*** Electric winches are designed and made for intermittent use and should not be used in constant duty applications.*

Line Pull and Cable Capacity Per Layer					
Layers of Cable on Drum		1	2	3	4
Rated Line Pull	LB	5000	4040	3389	2919
	KG	2268	1833	1537	1324
Cable Capacity	FT	10.9	24.4	40.6	50
	M	3.3	7.4	12.3	12.3

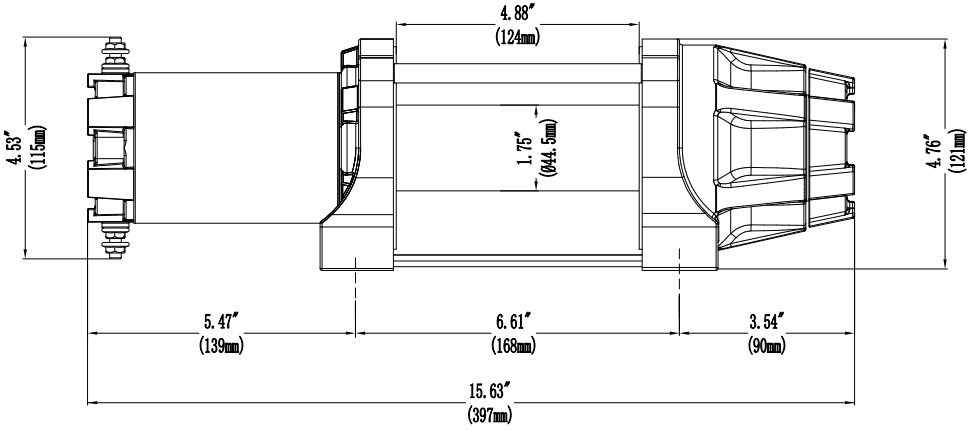

Parts Diagram

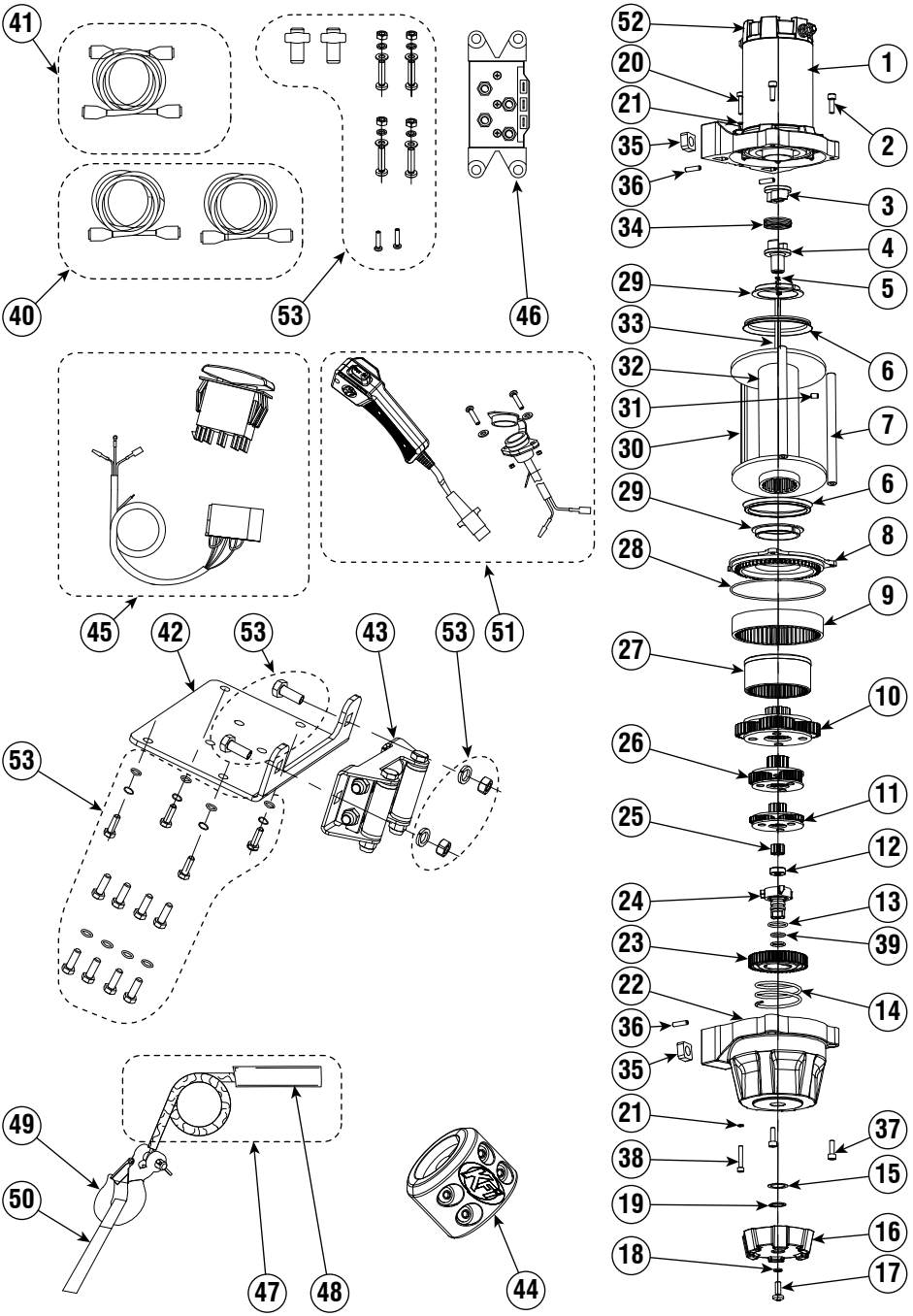

Parts List

#	Part Number	Description	Qty
1	MOTOR-AS50	Motor Assembly	1
2	HW-0023-B	Screw M5 x 16 Socket	2
3	WP-0026	Coupling, I	1
4	WP-0055	Coupling, II	1
5	WP-0079	Spring, Shaft	1
6	WP-0061	Delf-seal Packing	2
7	WP-0080	Tie Bar Ø10 x 129	2
8	WP-0054	Clutch Cover, Assault	1
9	WP-0068	Gear Ring, I	1
10	WP-0065	Gear Carrier Asm, Output	1
11	WP-0064	Gear Carrier Asm, Input	1
12	WP-0078	Bearing 606 Sealed	1
13	WP-0077	O-Ring Ø19 x 2.4	1
14	WP-0085	Spring, Clutch	1
15	HW-0024	Washer SS Ø16	1
16	WP-0002	Clutch Cap, Assault	1
17	HW-0007-B	Screw M6 x 16 Phillips	1
18	HW-0006-B	Washer Ø6 Lock	1
19	HW-0004	Circlip Ø15	1
20	HW-0025-B	Screw M4 x 20 Socket	1
21	HW-0020-B	Lock Washer Ø4	2
22	WP-0067	Gear Housing	1
23	WP-0053	Cam, Clutch Gear	1
24	WP-0052	Bushing, Axis Support	1
25	WP-0084	Gear, Input, Sun	1
26	WP-0063	Gear Carrier Asm	1
27	WP-0069	Gear Ring, II	1
28	WP-0075	O-Ring Ø100 x 1.9	1
29	WP-0062	Bushing, Drum	2
30	WP-0073	Hex Tie Bar 6 x 131	1
31	WP-0025	Set Screw M5 x 8	1
32	WP-0057	Drum, Steel, Wide	1
33	WP-0071	Shaft, Hexagon, H6 x 187	1
34	WP-0027	Spring, Coupling	1
35	WP-0049	Square Nut	4
36	WP-0050	Pin, Spring, Ø3 x 14	4
37	HW-0026-B	Screw M5 x 18 Socket	2
38	HW-0019-B	Screw M4 x 25 Socket	1
39	WP-0076	O-Ring Ø13 x 2	2
40	SE-WIRES-UTV-WIN	Wiring, Winch, UTV	1
40.1	WP-0092	Terminal Protector	4

#	Part Number	Description	Qty
41	SE-WIRES-UTV-BAT	Wiring, Battery, UTV	1
41.1	WP-0092	Terminal Protector	4
42	100695	Bracket, Fairlead, Wide	1
43	SE-WRF	Roller Fairlead, Wide, Stealth	1
44	ATV-SCHS	Split Cable Hook Stopper	1
45	UTV-DRS-K	UTV Dash Rocker Switch Kit	1
46	AS-CONT	Contactor, Assault	1
47	SYN25-S50	Cable, Synthetic, 15/64" x 50ft	1
48	UTV-RPS	Protective Sheath, Replacment	1
49	SE-HOOK	Clevis Hook, 1/4"	1
50	WP-0030-BLK	Hand Saver Strap, Black	1
51	ATV-HR	Hand Remote Asm	1
52	AS-CAPKIT	Motor End Cap Assembly	1
53	HK-500	Hardware Kit, Black	1
53.01	HW-0001	Wire Tap	2
53.02	HW-0014-B	Nut M6 Nylock	4
53.03	HW-0006-B	Washer Ø6 Lock	4
53.04	HW-0003-B	Washer Ø6	4
53.05	HW-0013-B	Bolt M6 x 25	4
53.06	HW-0015-B	Bolt M6 x 20	2
53.07	HW-0010-B	Bolt M10 x 20	2
53.08	HW-0011-B	Washer Ø10 Lock	2
53.09	HW-0012-B	Nut M10 Nylock	2
53.10	HW-0016-B	Washer Ø8	8
53.11	HW-0009-B	Washer Ø8 Lock	4
53.12	HW-0008-B	Bolt M8 x 25	4
53.13	HW-0018-B	Bolt M8 x 20	4
53.14	HW-0017-B	Bolt M8 x 30	4

TROUBLESHOOTING

Problem	Cause	Solution
Motor does not run, Contactor makes a click sound.	Incorrect Wiring	Check Winch Wiring Diagram, make sure all wires are correctly connected.
	Incorrect Wiring	Hand Remote / Mini Rocker Switch wires must be connected green to green and black to black.
	Loose battery cable connections	Hand tighten nuts on all cable connections.
	Motor Issue	Contact KFI Technical Support
	Water has entered motor	Allow to drain and dry. Run in short burst with load until completely dry.
	Brake Spring installed backwards	Contact KFI Technical Support.
Motor does not run, NO click sound from Contactor.	Incorrect Wiring	Check Winch Wiring Diagram, make sure all wires are correctly connected.
	Switch Ignition Wire	Check connection to an ignition fed source. Must supply 12V with the key on and vehicle running.
	Contactor malfunctioning	Contact KFI Technical Support.
	Switch malfunctioning	Contact KFI Technical Support.
Motor runs, Spool turns in one direction only.	Incorrect Wiring	Check wiring diagram, verify switch wires (black/green) are properly connected and making good contact.
	Defective or stuck Contactor	Tap contactor to loosen plungers.
	Defective Switch assembly	Replace Switch assembly.
	Contactor malfunctioning	Contact KFI Technical Support.
Motor runs, Spool does NOT turn.	Clutch not engaged	Rotate Clutch Cap to Engage.
	Broken Coupler / stripped Shaft	Replace Coupler or Shaft
Spool turns, but no movement from Cable	Cable not attached to Spool	Contact KFI Technical Support.
Motor runs slowly or without normal power.	Insufficient current or voltage.	The battery is weak, recharge. Run winch with vehicle motor running (battery should have a strong charge).
	Loose or corroded battery cable connections	Clean, tighten, or replace.
	Worn Brushes	Replace with End-Cap Kit (#AS-CAPKIT) Contact KFI Technical Support.
Motor overheating	Winch running time too long	Allow winch to cool down periodically.

For further support, contact:

KFI Tech Support

Mon-Thr 8:00 AM - 5:00 PM (CST/CDT)
Fri 7:00 AM - 1:00PM (CST/CDT)
Toll Free: 1-877-346-2050
tech@kfiproducts.com

KFI Products Website Support:

Common installation, maintenance, and troubleshooting guides are available on our website.

https://www.kfiproducts.com/support.html

WARRANTY

KAPPERS FABRICATING, INC.
2 YEAR LIMITED LIFETIME WARRANTY

Warranty Qualifications

Kappers Fabricating Inc. (KFI) will register this warranty upon receipt of your Warranty Registration Card and a copy of your sales receipt from one of KFI's resale locations as proof of purchase. Please submit your warranty registration and your proof of purchase within Fifteen (15) days of the date of purchase.

Repair/Replacement Warranty

KFI warrants to the original purchaser that mechanical components will be free of defects in material and workmanship for the usable lifetime of the product (180 days for commercial use); and electrical components will be free of defects in material and workmanship for (2) years (180 days for commercial use); from the original date of purchase. Transportation charges on product submitted for repair or replacement under this warranty are the sole responsibility of the purchaser. This warranty only applies to the original purchaser and is not transferable.

Do Not Return The Unit To The Place Of Purchase

Contact KFI's Technical Service and KFI will troubleshoot any issue via phone or e-mail. If the problem is not corrected by this method, KFI will, at its option, authorize evaluation, repair or replacement of the defective part or component at a KFI Service Center. KFI will provide you with a case number for warranty service. Please keep it for future reference. Repairs or replacements without prior authorization, or at an unauthorized repair facility, will not be covered by this warranty.

Warranty Exclusions

This warranty does not cover the following repairs and equipment:

Normal Wear

Winches need periodic parts and service to perform well. This warranty does not cover repair when normal use has exhausted the life of a part or the equipment as a whole.

Installation, Use and Maintenance

This warranty will not apply to parts and/or labor if this winch is deemed to have been misused, neglected, involved in an accident, abused, loaded beyond the winch's limits, modified, installed improperly or wired incorrectly to any electrical component. Normal maintenance is not covered by this warranty.

Other Exclusions

- The winch cable or synthetic cable.
- Cosmetic defects such as paint, decals, etc.
- Accessory parts such as storage covers.
- Misuse, abuse, neglect, acts of God, terrorism and causes beyond the control of KFI.
- Problems caused by parts that are not original Kappers Fabricating Inc. parts.
- Cable Stacking and Water Submersion or Damage Caused by Water.

Warranty Procedure

1. Contact KFI Technical support to acquire a Return Authorization (RA) number.
2. KFI may request additional materials (such as original sales receipt, date of purchase, technical details, or photos of Product condition) prior to issuing an RA number.
3. At the discretion of KFI, Buyer shall mail, ship, or otherwise deliver to KFI the Warrantied Product, at the address noted below.

Limits of Implied Warranty and Consequential Damage

Kappers Fabricating Inc. disclaims any obligation to cover any loss of time, use of this product, freight, or any incidental or consequential claim by anyone from using this winch. THIS WARRANTY IS IN LIEU OF ALL OTHER WARRANTIES, EXPRESS OR IMPLIED, INCLUDING WARRANTIES OF MERCHANTABILITY OR FITNESS FOR A PARTICULAR PURPOSE

A unit provided as an exchange will be subject to the warranty of the original unit. The length of the warranty governing the exchanged unit will remain calculated by reference to the purchase date of the original unit.

This warranty gives you certain legal rights which may change from state to state. Your state may also have other rights you may be entitled to that are not listed within this warranty.

Contact Information

Address

KFI Products
Winch Customer Service
P.O. BOX 32
721 SATA DRIVE
SPRING VALLEY, MN 55975

Corporate

KAPPERS FABRICATING, INC.
P.O. BOX 32
1015 INDUSTRIAL DR.
SPRING VALLEY, MN 55975

Customer Service

Mon - Thr 8:00 AM - 5:00 PM (CST/CDT)
Fri - 7:00 AM - 1:00 PM (CST/CDT)
Toll Free: 1-877-346-2050 Opt 1
Fax No: 1-507-346-2010
E-mail: sales@kfiproducts.com

Technical Service

Mon - Thr 8:00 AM - 5:00 PM (CST/CDT)
Thr - 7:00 AM - 1:00 PM (CST/CDT)
Toll Free: 1-877-346-2050 Opt 2
E-mail: tech@kfiproducts.com

Website

https://www.kfiproducts.com

1-877-346-2050

KFI PRODUCTS
P.O. BOX 32
721 SATA DRIVE
SPRING VALLEY, MN 55975

WWW.KFIPRODUCTS.COM

CORPORATE OFFICE:

KAPPERS FABRICATING, INC.
P.O. BOX 32
1015 INDUSTRIAL DR.
SPRING VALLEY, MN 55975
USA

CE

MADE IN CHINA
©2025 KAPPERS FABRICATING, INC.

JOHN DEERE GATOR XUV

Winch Mount PART # 100860
Hardware Kit: HK-097, HK-031

Kit Components:

Qty.	Part Description
1	Winch Mount Plate
2	Winch Mount Spacer Plate
4	3/8”-16 x 1-1/4” Hex Flange Bolt (HK-097)
1	UTV Mini Rocker Kit (HK-031)

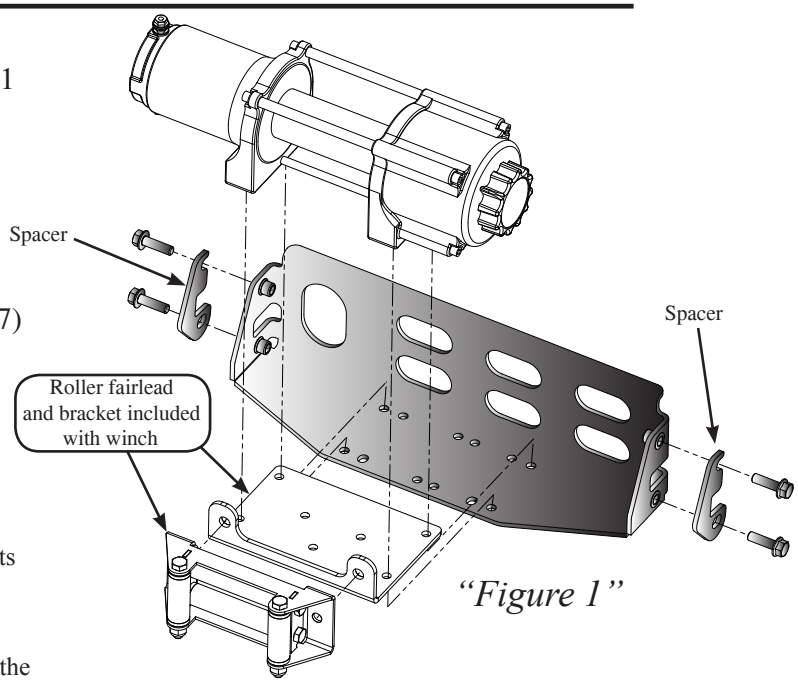

“Figure 1”

INSTALLATION INSTRUCTIONS:

1. Detach front bumper tubes by removing 2 pull pins and 2 bolts (A). (See Figure 2)

2. Bolt the roller fairlead to your fairlead bracket. Then bolt the winch and roller fairlead assembly to the winch mount using the hardware included with your winch (as shown in Figure 1).

   Note: Follow instructions included with your winch for attaching the cable and wiring. The large holes in the back of the winch mount plate provide access for wiring.

3. Place winch assembly into position as in Figure 3. Using the supplied 3/8” hardware, bolt the winch mount plate and spacers to the frame (B) as shown in Figure 4.

4. To make install easier, bolt the spacer by running lower bolt through frame and mount, then rotate up and install remaining hardware. (See Figure 4)

5. **See bold note on Page 2 for wiring instructions.**

6. Reattach front bumper tubes using pull pins and bolts removed previously.

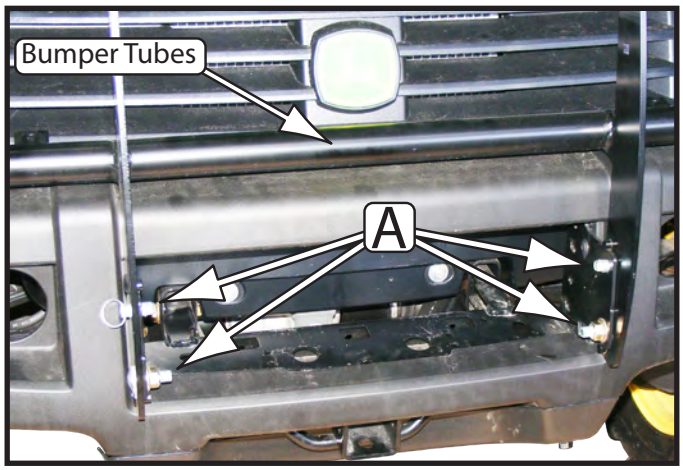

“Figure 2” Bumper Removal

“Figure 3” Mount Plate Install

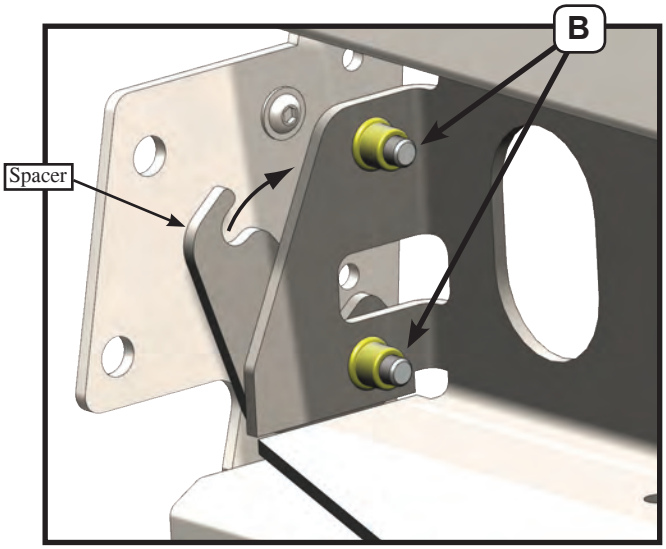

“Figure 4” Spacer Install

©2012 Copyright Kappers Fabricating, Inc. All rights reserved

WIRING INFORMATION

1. For contactor location see “Figure 5”. There is no particular location on this machine, anywhere under the hood is best.

Note:
The wires will need to be switched for this machine. The longer wires (Blue/Yellow) will be used to go from the battery to the contactor. The shorter wires (Black/Red) will be used to go from the winch to the contactor.

2. Mini-Rocker Switch Hardware kit. This allows you to mount your usual handle bar mounted switch to almost any desired location.

    a. Remove handlebar mount hardware from the switch.
    b. Locate desired mounting location
    c. Mark and drill two switch holes through dash using switch housing as a template
    d. Drill a 3rd hole for the switch wiring.
    e. Assemble per Figure 7.

3. Find a location that suits your purposes for the mini-rocker switch and hand remote plug-in socket.

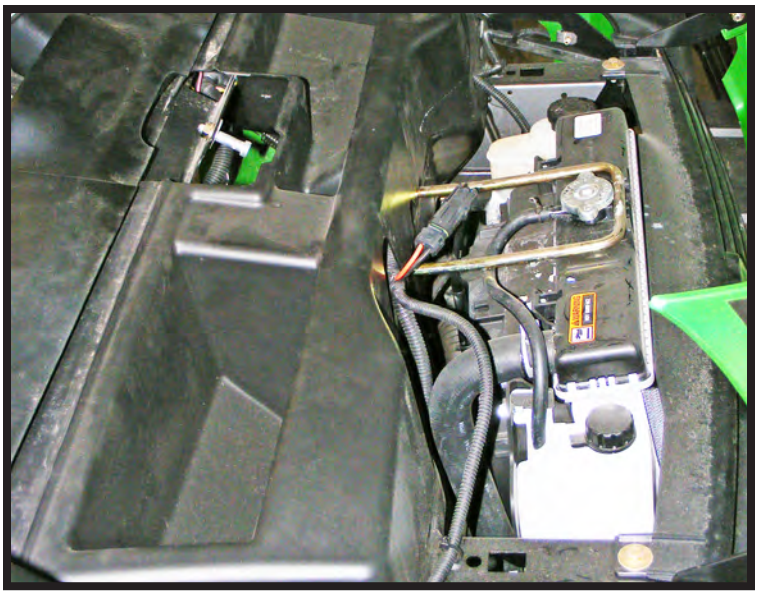

“Figure 5” Contactor Location (Under Hood)

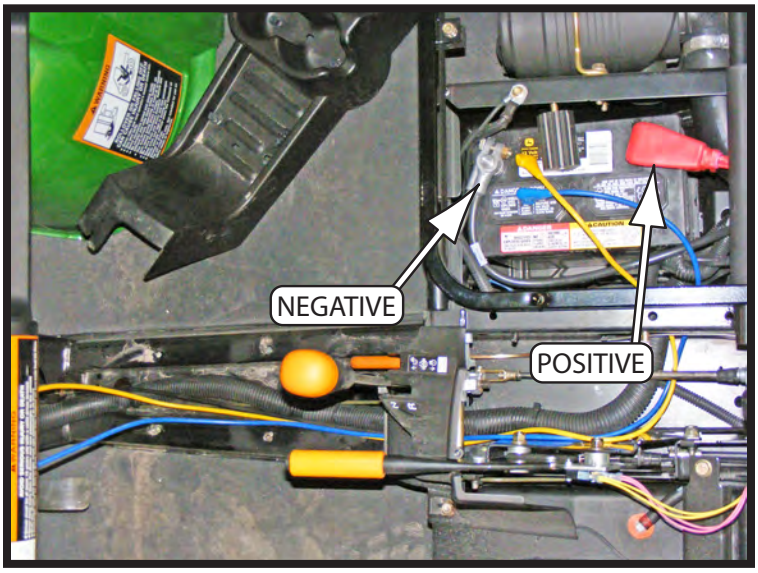

“Figure 6” Battery Location
(Battery is located under passenger seat.)

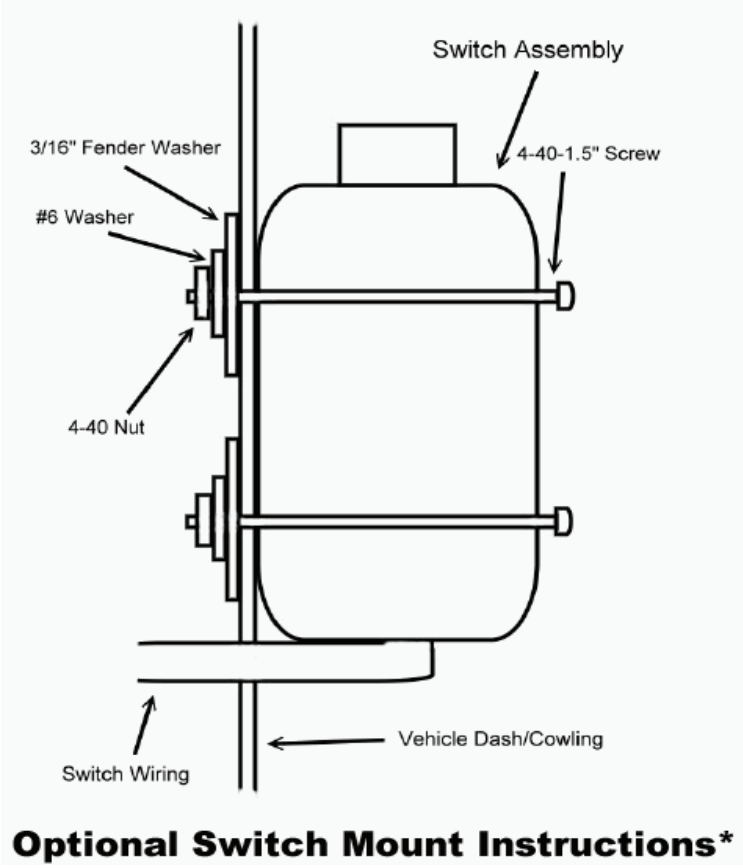

“Figure 7” Mini-Rocker Mounting

©2012 Copyright Kappers Fabricating, Inc. All rights reserved

JOHN DEERE GATOR XUV550/RSX850i

Winch Mount PART # 100940 Rev C.1
Hardware Kit: HK-413

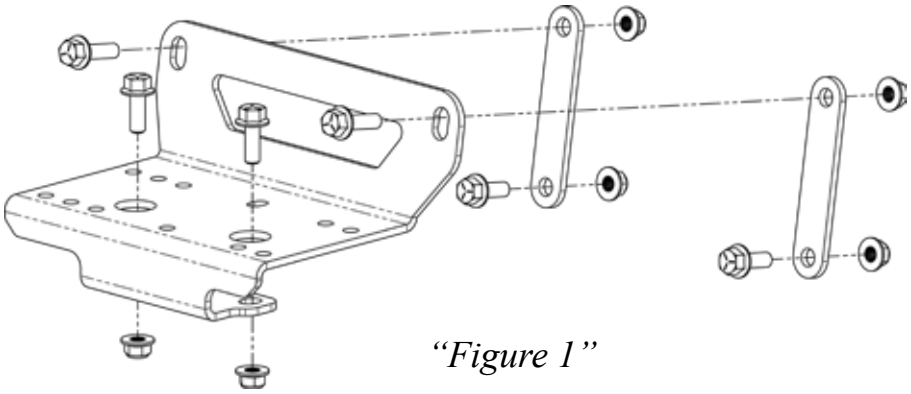

"Figure 1"

Kit Components:
Qty. Part Description

1..... Winch Mount Plate
2..... Strength Plate
4..... 3/8"-16 x 1" Hex Flange Bolt
2..... 3/8"-16 x 1.25" Hex Flange Bolt
6..... 3/8"-16 Hex Flange Nut
8..... 3/8" Flat Washer (Not Used)
2..... 3/8" Fender Washer - 1.25" x .125" (Not Used)
1..... UTV Mini Rocker Kit (HK-031)

INSTALLATION INSTRUCTIONS:

If there is a stock winch mount (Figure 1) installed follow Step 1, if not skip to Step 2.

1. Remove nuts, bolts and strength plates (A) as shown in Figures 2&3.

   Note: Be sure not to drop the nuts as they are very hard to get out.

2. Place mount plate into position. Install rear bolts, nuts and strength plates (B) as shown in Figure 3. The 1.25" Hex Flange Bolts are the top two bolts.(Only bolts visible in Figure 4.) Leave the hardware loose at this time.

   Note: Strength plates go behind the frame plate. See Figure 3 for location.

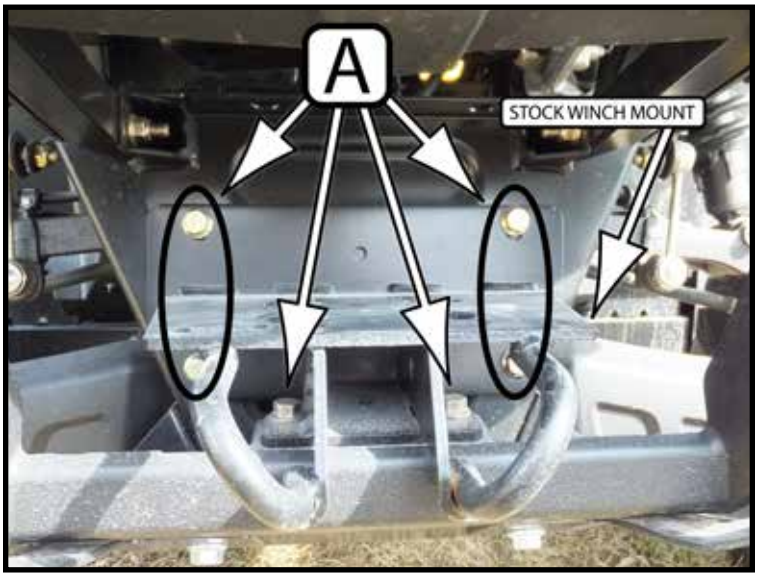

"Figure 2" Stock Mount Removal

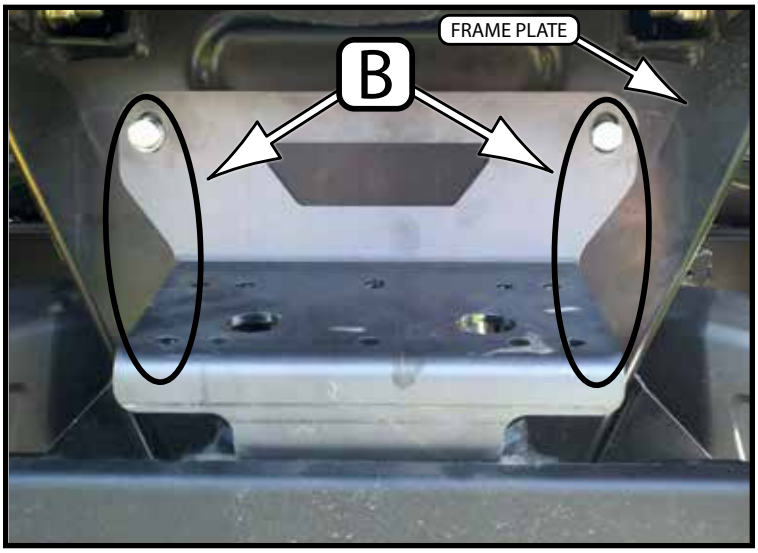

"Figure 4" Mount Plate and Strength Plate Install

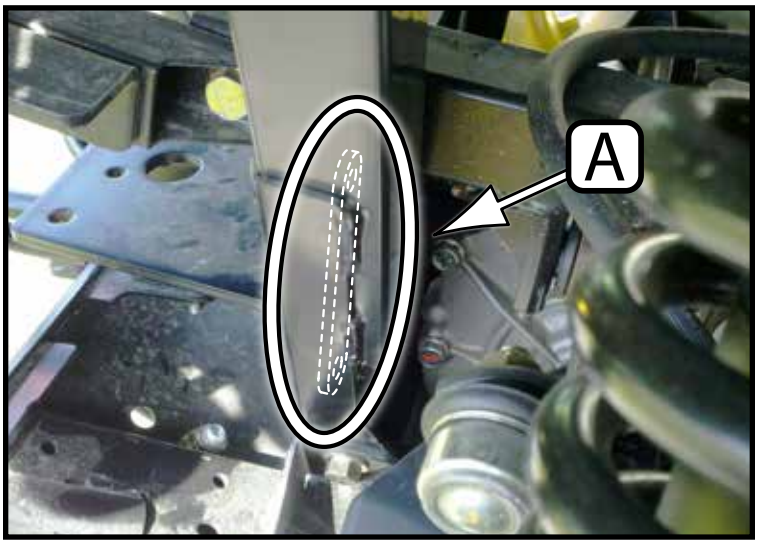

"Figure 3" Strength Plate Location
Note: Strength Plate is behind the frame.

©2013 Copyright Kappers Fabricating, Inc. All rights reserved

3. Bolt lower portion of mount plate using the remaining 3/8” hardware provided with your winch mount.

4. Tighten all mount hardware at this time.

5. Install roller fairlead to fairlead plate as shown in Figure 6 using the hardware provided with your winch.

6. Install fairlead bracket assembly and winch to winch mount using the hardware provided with your winch. See Figure 6. See Figure 7 for winch hole patterns.

   Note: On some winches it maybe easier to install wiring to the winch before installing the winch to the mount plate.

7. Use the instructions provided with your winch, wire accordingly.

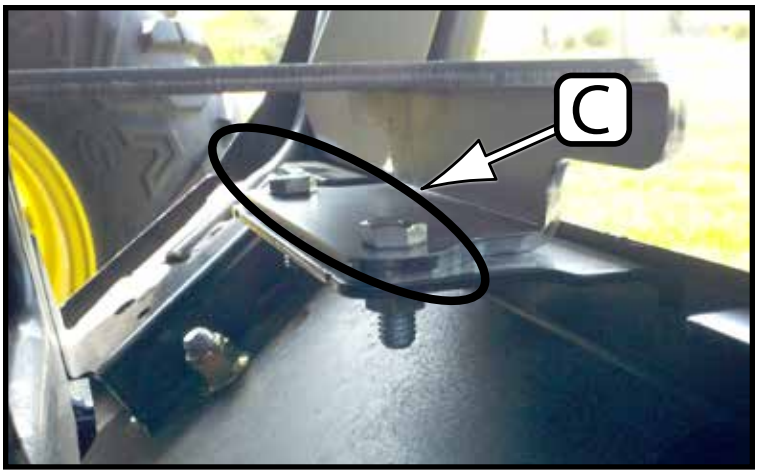

“Figure 5” Winch Mount Lower Bolts Install

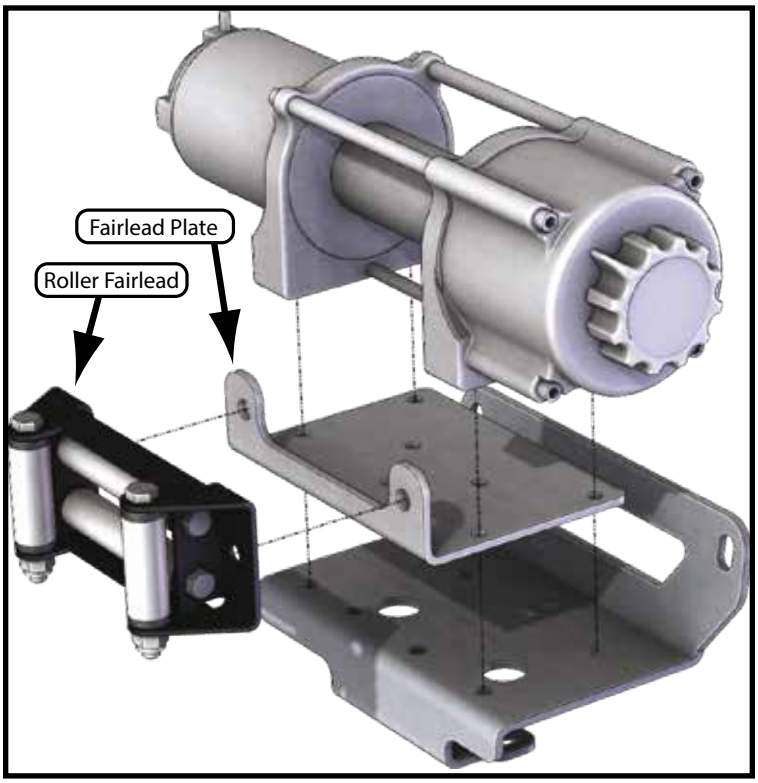

“Figure 6” Fairlead Bracket and Winch Install

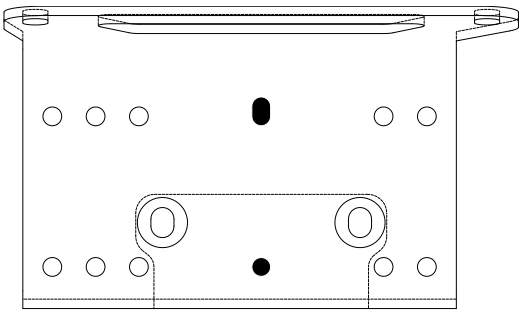

2 Hole Winch Pattern

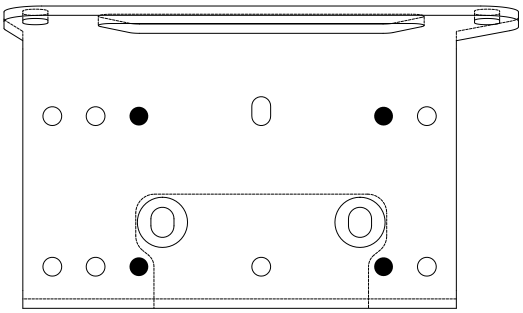

Standard Winch Hole Pattern

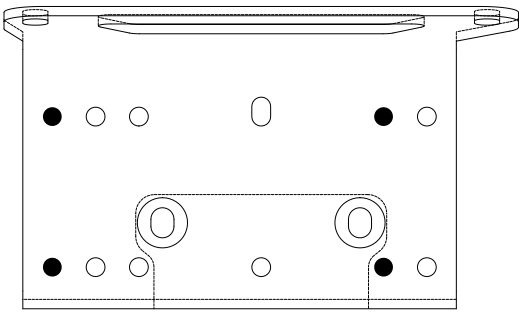

XUV Wide Winch Hole Pattern

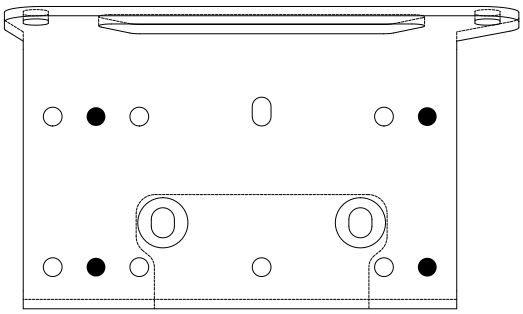

RSX Wide Winch Hole Pattern

“Figure 7” Winch Hole Pattern

©2013 Copyright Kappers Fabricating, Inc. All rights reserved

WIRING INFORMATION

1. For contactor location please see “Figure 8”. This is located under the hood of the machine.

2. Mini-Rocker Switch Hardware kit. This allows you to mount your usual handle bar mounted switch to almost any desired location.

   a. Remove handlebar mount hardware from the switch.
   b. Locate desired mounting location
   c. Mark and drill two switch holes through dash using switch housing as a template
   d. Drill a 3rd hole for the switch wiring.
   e. Assemble per Figure 10.

3. Find a location that suits your purposes for the mini-rocker switch and hand remote.

4. Wire the red ignition wires from controllers to a key controlled wire. Usually a good spot for this is the red wire on the accessory plug.

“Figure 8” Contactor Location

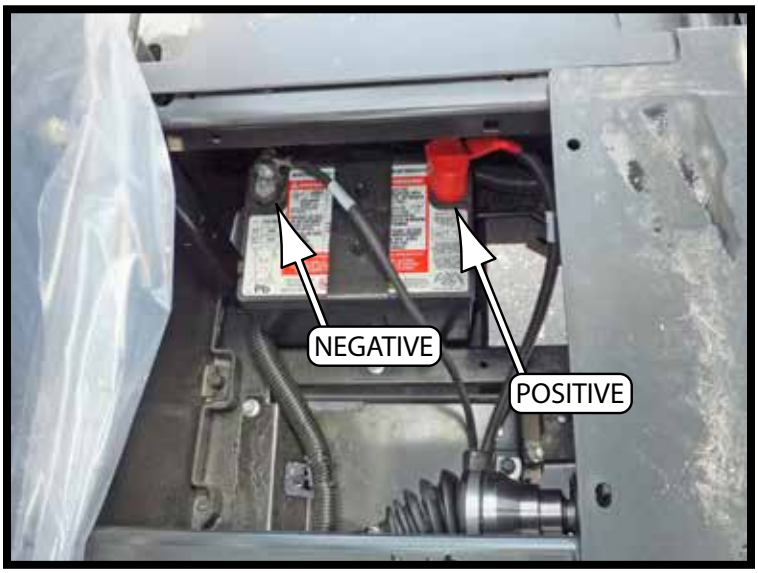

“Figure 9” Battery Location
(Battery is located under steering column.)

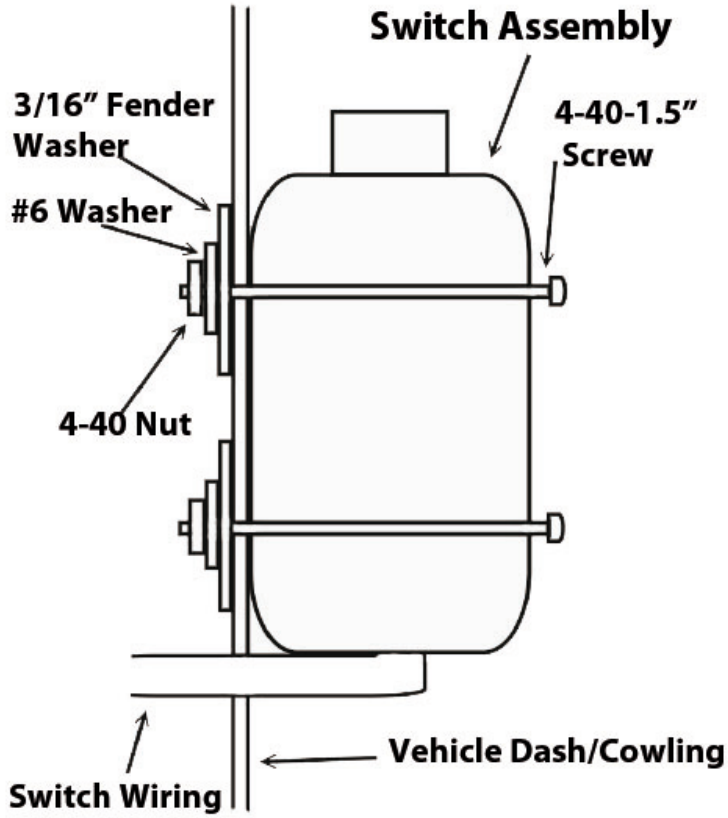

Optional Switch Mount Instructions*

“Figure 10” Mini-Rocker Mounting

JOHN DEERE 835 & 865

Winch Mount PART # 101660

Kit Components:

Item #	Qty.	Description
1	1	Winch Mount
2	1	HK-031

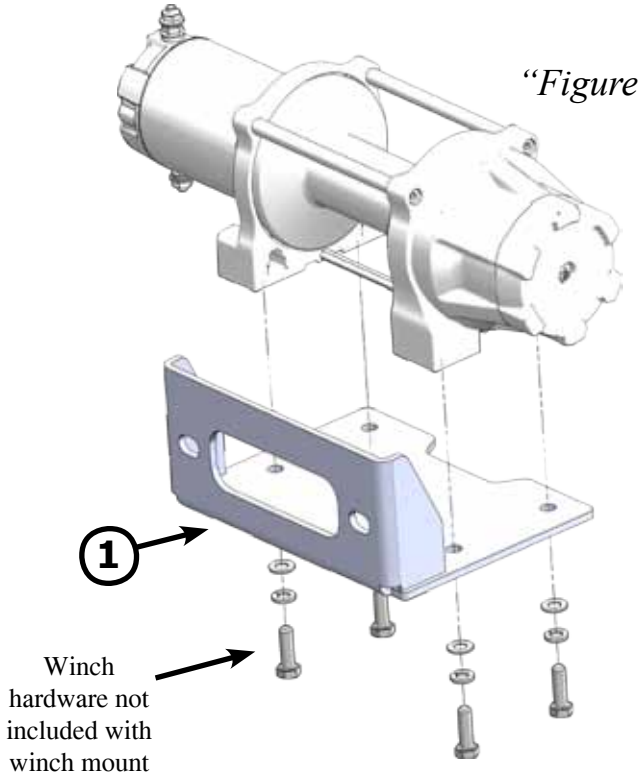

"Figure 1"

INSTALLATION INSTRUCTIONS:

Note: This winch mount is only designed for WIDE winches with a 4-Hole bolt pattern of 3.00"x 6.60"

1. Place winch mount (1) inside of bumper location (A) Shown in Figure 2.
2. Line up winch mount (1) with the OEM holes (A) in the bumper. Shown in Figure 3.
3. Place winch on top of mount and fasten down using the hardware provided with your winch as shown in Figure 1.
4. Attach your fairlead/hawse to the mount (1) mount using hardware provided in location (B) with your winch.
5. Using the instructions provided with your winch, wire accordingly.

NOTE: Mini-Rocker Switch Hardware kit (HK-031). This allows you to mount your usual handle bar mounted switch to almost any desired location.

- Remove handlebar mount hardware from the switch.
- Locate desired mounting location
- Mark and drill two switch holes through dash using switch housing as a template
- Drill a 3rd hole for the switch wiring.
- Assemble per below using HK-031 hardware.

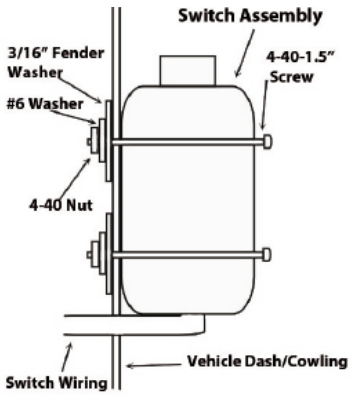

Optional Switch Mount Instructions*

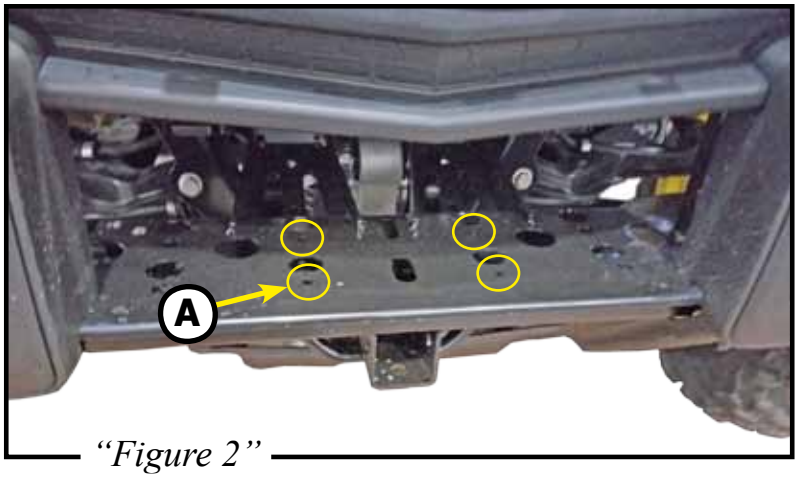

"Figure 2"

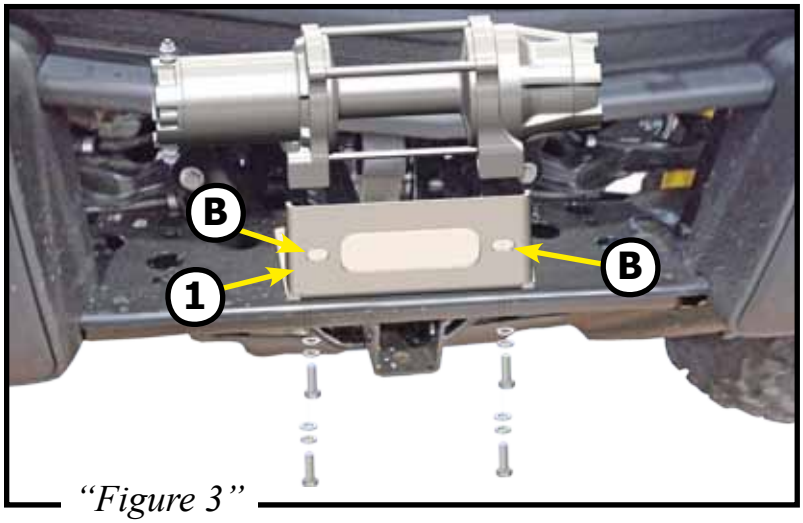

"Figure 3"

©2018 Copyright Kappers Fabricating, Inc. All rights reserved

UTV V-PLOW TRACK EXTENSION

Plow Accessory

Part #106280 Rev. A

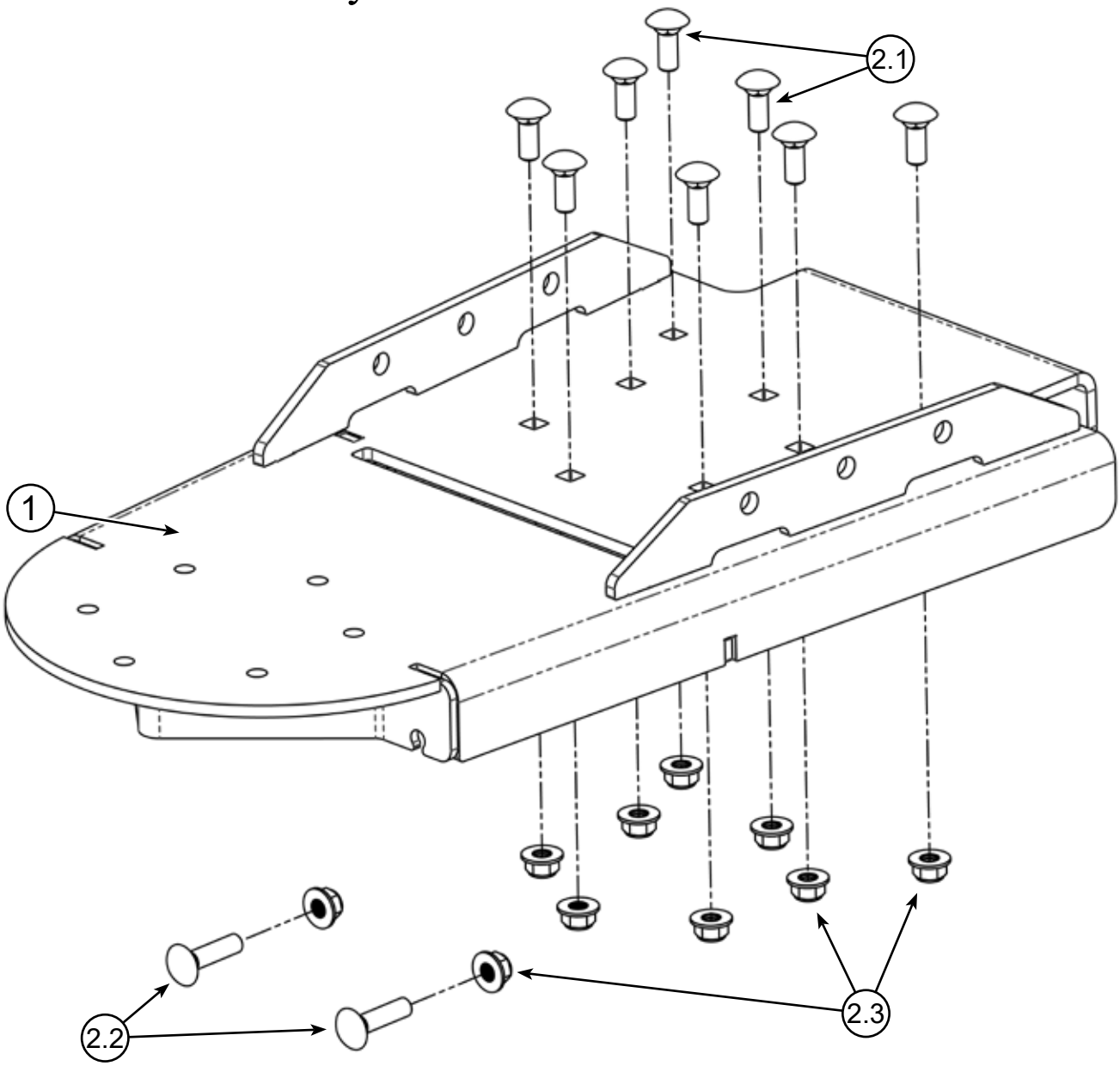

Kit Components:		
Item #	Qty.	Description
1	1	Track Extension Weldment (106281)
2	1	Hardware Kit HK-393
2.1	8	3/8”-16 x 1.00 Carriage Bolt GR5
2.2	2	3/8”-16 x 1.50 Carriage Bolt GR5
2.3	10	3/8”-16 Hex Nut Flange Nylock GR5

©2024 Copyright Kappers Fabricating, Inc. All rights reserved

05/13/24

INSTALLATION INSTRUCTIONS

Note: Make sure all hardware needed to complete this mount is in the package. Thoroughly read through and understand the instructions before installing.

1. If you are converting an existing Pro-S or Pro-Poly Plow System, remove the Cradle Assembly and Lift Hook Bracket from the push tubes as shown in **Figure 1**. Discard all brackets and hardware removed in this step as they will not be reused.

Figure 2

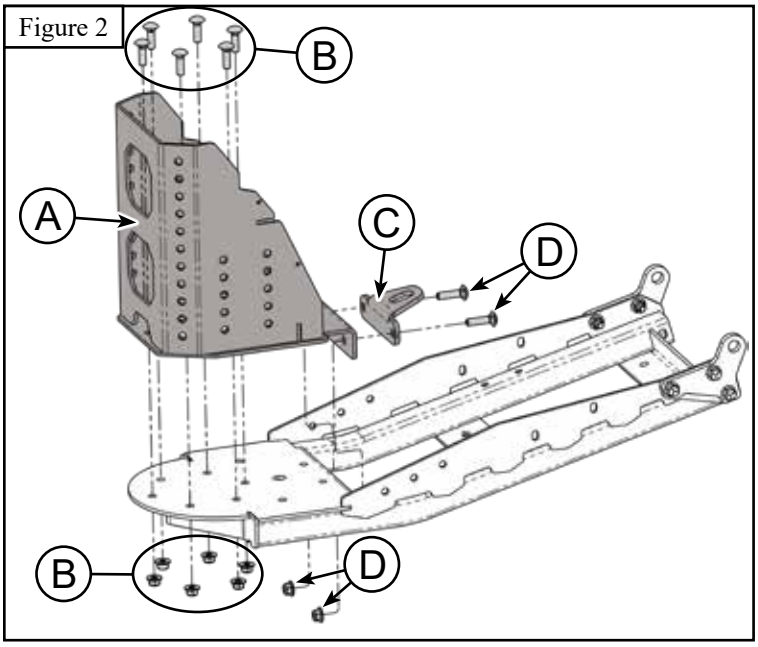

2. If you are installing the V-Plow Track Extension (1) onto an existing V-Plow System, remove the V-Plow Tube Center Pivot (A) with hardware (B) and Lift Hook Bracket (C) with Hardware (D) as shown in **Figure 2**. Save all hardware and brackets from this step for later reinstallation.

3. Once the Push Tube Bulkhead is disassembled, or if you are starting with a Push Tube Weldment, Install V-Plow Track Extension (1) using Bolts (2.1) and Nuts (2.3) as shown in **Figure 3**. Leave hardware loose.

4. Install the V-Plow Tube Center Pivot (A) onto the Track Extension (1) as shown in **Figure 4**. Leave Hardware (B) Loose.

Figure 1

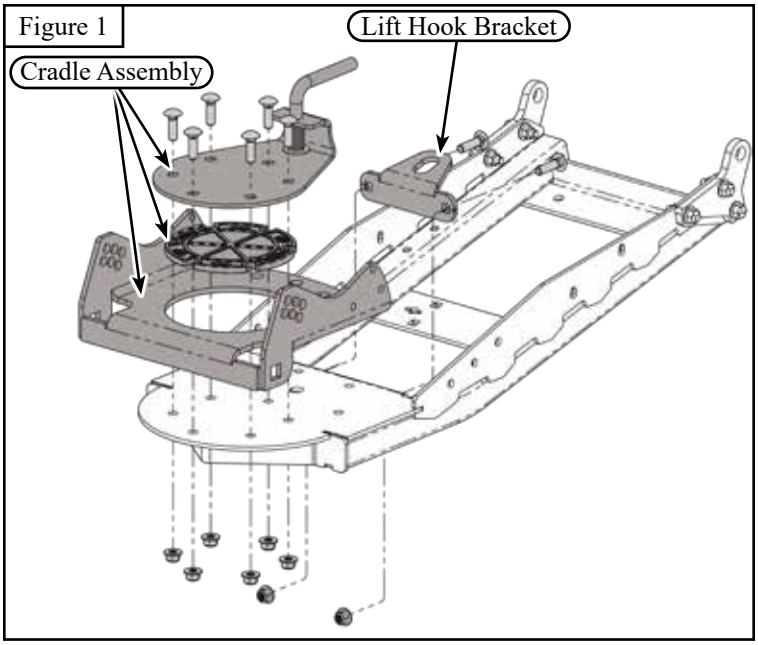

Figure 3

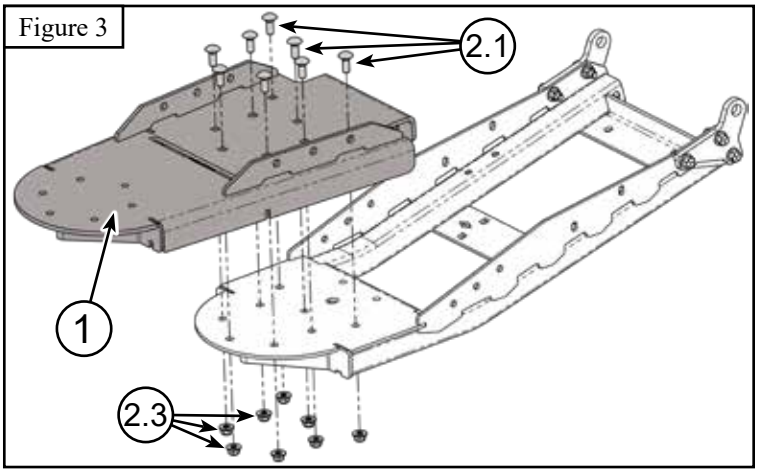

Figure 4

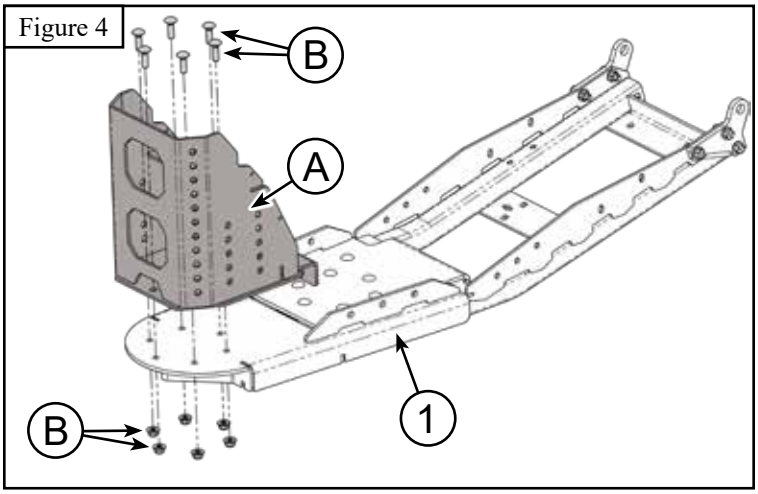

©2024 Copyright Kappers Fabricating, Inc. All rights reserved

INSTALLATION INSTRUCTIONS

Figure 5

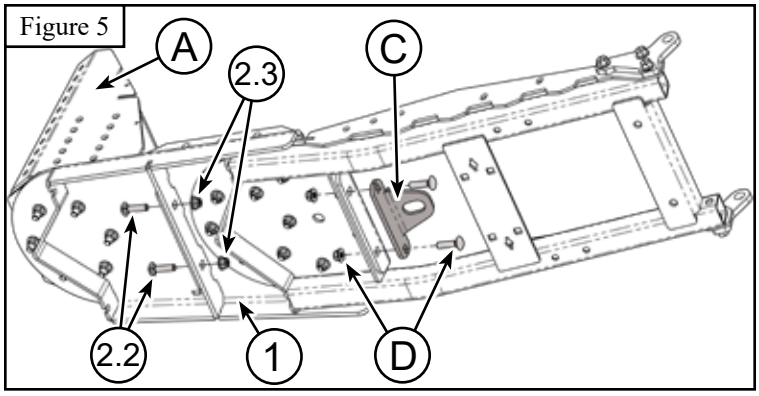

5. Use bolts (2.2) and nuts (2.3) to connect the Track Extension (1) and V-Plow Tube Center Pivot (A) as shown in **Figure 5**. Attach the Lift Hook Bracket (C) in it's original location with original hardware (D). Leave hardware loose.

Note: If you have a winch mounted high on your machine, an alternate lift hook location can be used as shown in **Figure 7**. If you relocate the Hook Bracket (C), Hardware (D) must be moved with it. See **Figure 6**.

6. Tighten all harware evenly

Figure 6

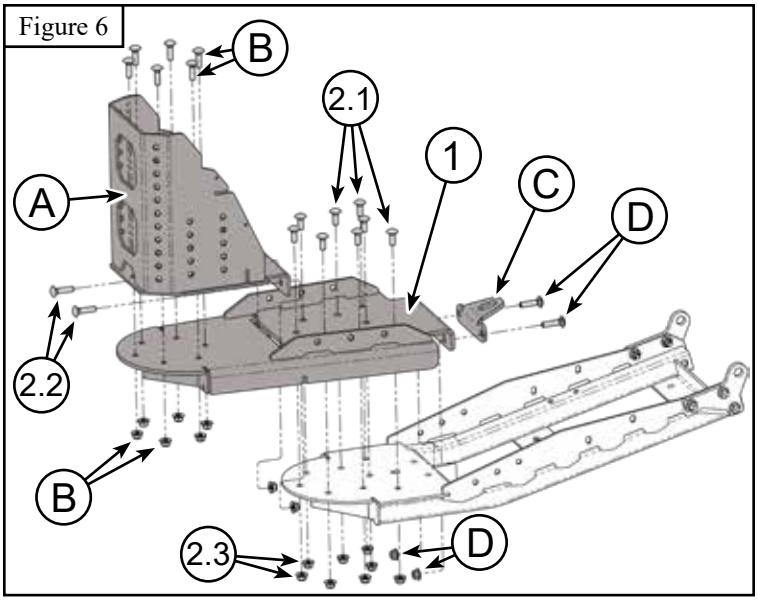

Figure 7 Lift Hook Bracket Position

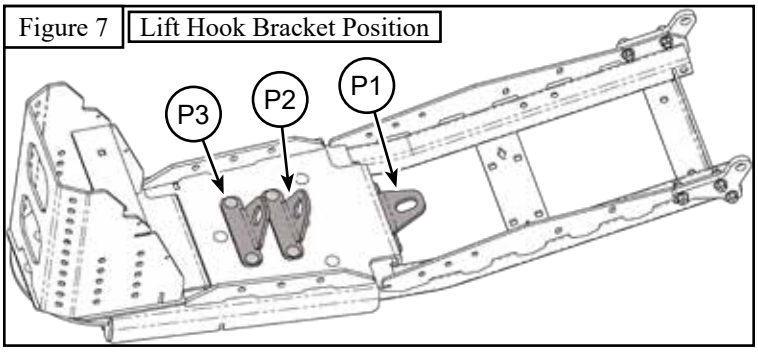

©2024 Copyright Kappers Fabricating, Inc. All rights reserved

NEGATIVE -1” SQ TUBE LEVELING KIT

Plow Accessory PART #106320

Kit Components:		
Item #	Qty.	Description
1	2	-1” PIN ATTATCHMENT BRACKET
2	1	HARDWARE KIT (HK-398)
2.1	6	3/8”-16 X 1.25 HEX BOLT FLANGE
2.2	6	3/8”-16 HEX NUT FLANGE NYLOCK

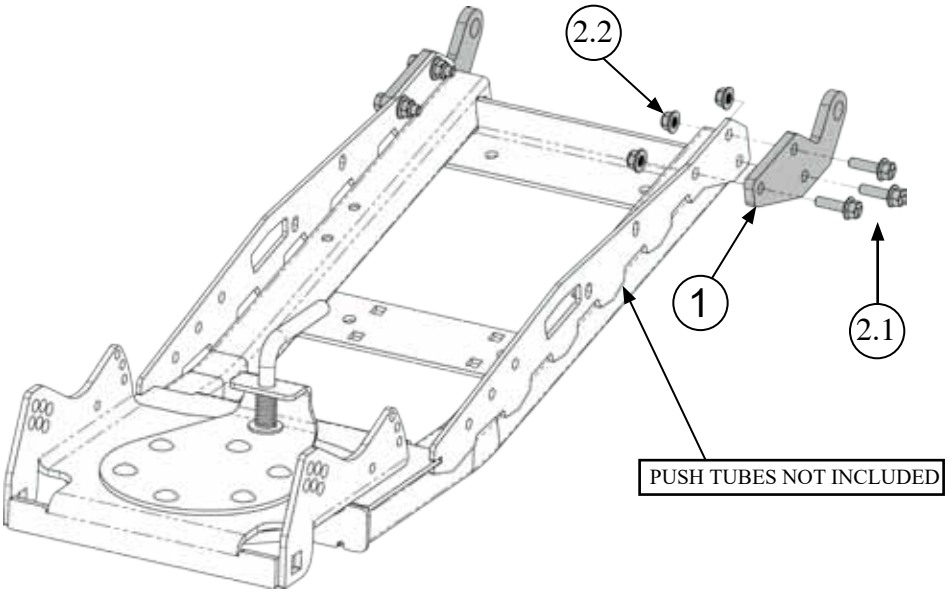

INSTALLATION INSTRUCTIONS

1. Remove current standard attachment brackets and discard hardware
2. Fasten the pin attachment brackets (1) to the push tubes using bolts (2.1) and nuts (2.2) as shown in image above.
3. Torque 3/8” bolts to 31lb-ft

©2022 Copyright Kappers Fabricating, Inc. All rights reserved

1”- 2” SQ PUSH TUBE LEVELING KIT

Plow Accessory PART #106322

Kit Components:		
Item #	Qty.	Description
1	2	Leveling Tab
2	1	Hardware Kit (HK-398)
2.1	6	3/8”-16 x 1.25 Hex Flange Bolt
2.2	6	3/8”-16 Hex Flange Nylock Nut

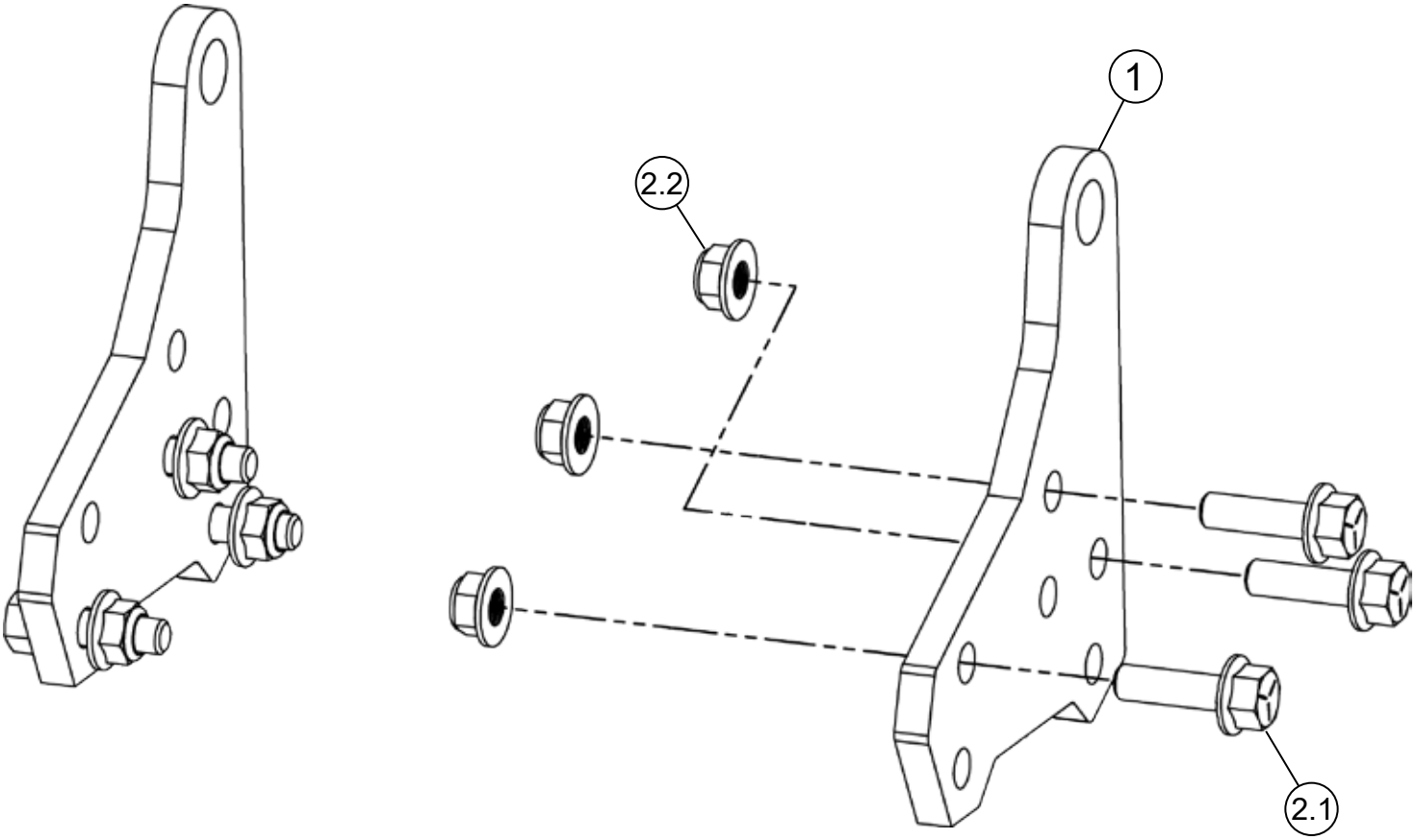

©2022 Copyright Kappers Fabricating, Inc. All rights reserved

INSTALLATION INSTRUCTIONS

Note: Make sure all hardware needed to complete this mount is in the package. Thoroughly read through and understand the instructions before installing.

Note: If standard pin attachment brackets have not yet been installed, skip to step 2.

Note: The ideal pin height is 10.875”. Use leveling kit configuration accordingly. (see figure 4) Be sure suspension is settled before measuring on flat level ground.

1. Remove and discard the existing standard pin attachment brackets (A) and hardware (B) as shown in **Figure 1**.

2. Set leveling tab (1) in place and secure using bolts (2.1) and nuts (2.2) as shown in **Figures 2 & 3**.

3. For the 1” leveling height configuration, see **Figure 2**. For the 2” leveling height configuration, see **Figure 3**.

4. Torque all hardware to **31 lb-ft**.

Figure 1

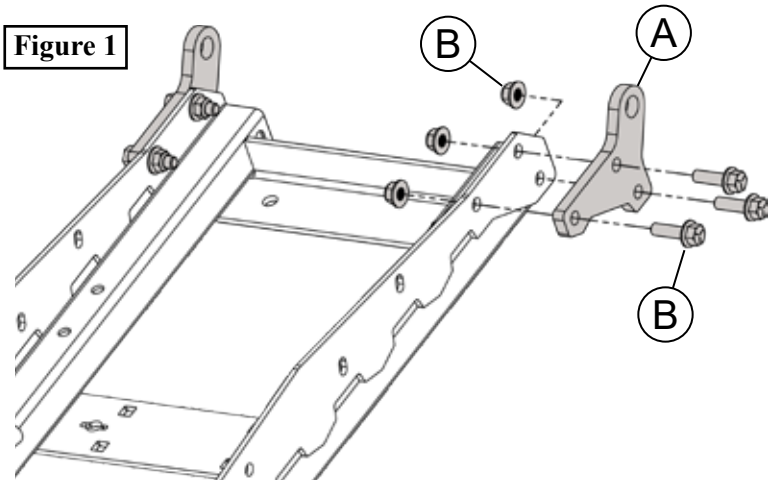

Figure 2

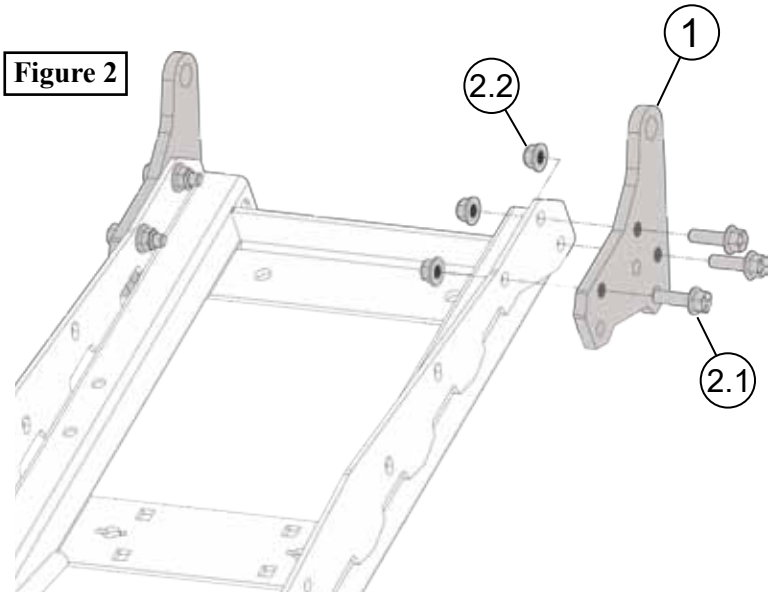

Figure 3

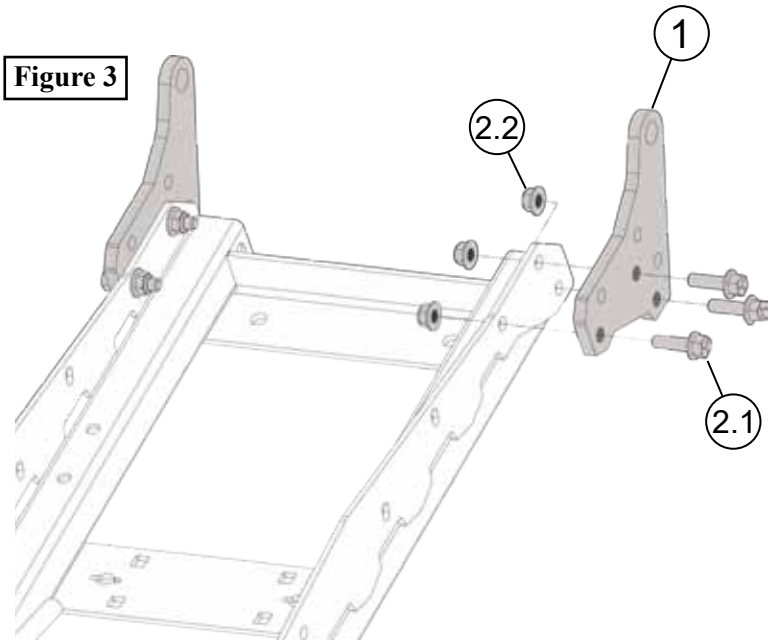

Figure 4

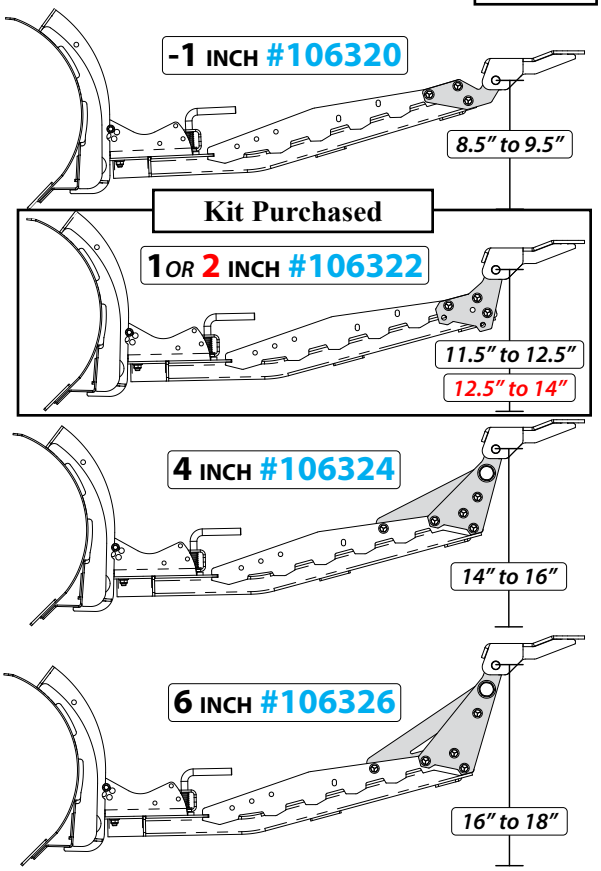

©2022 Copyright Kappers Fabricating, Inc. All rights reserved

PRO 2.0 - 4 INCH LEVELING KIT

Plow Accessory PART #106324 Rev C

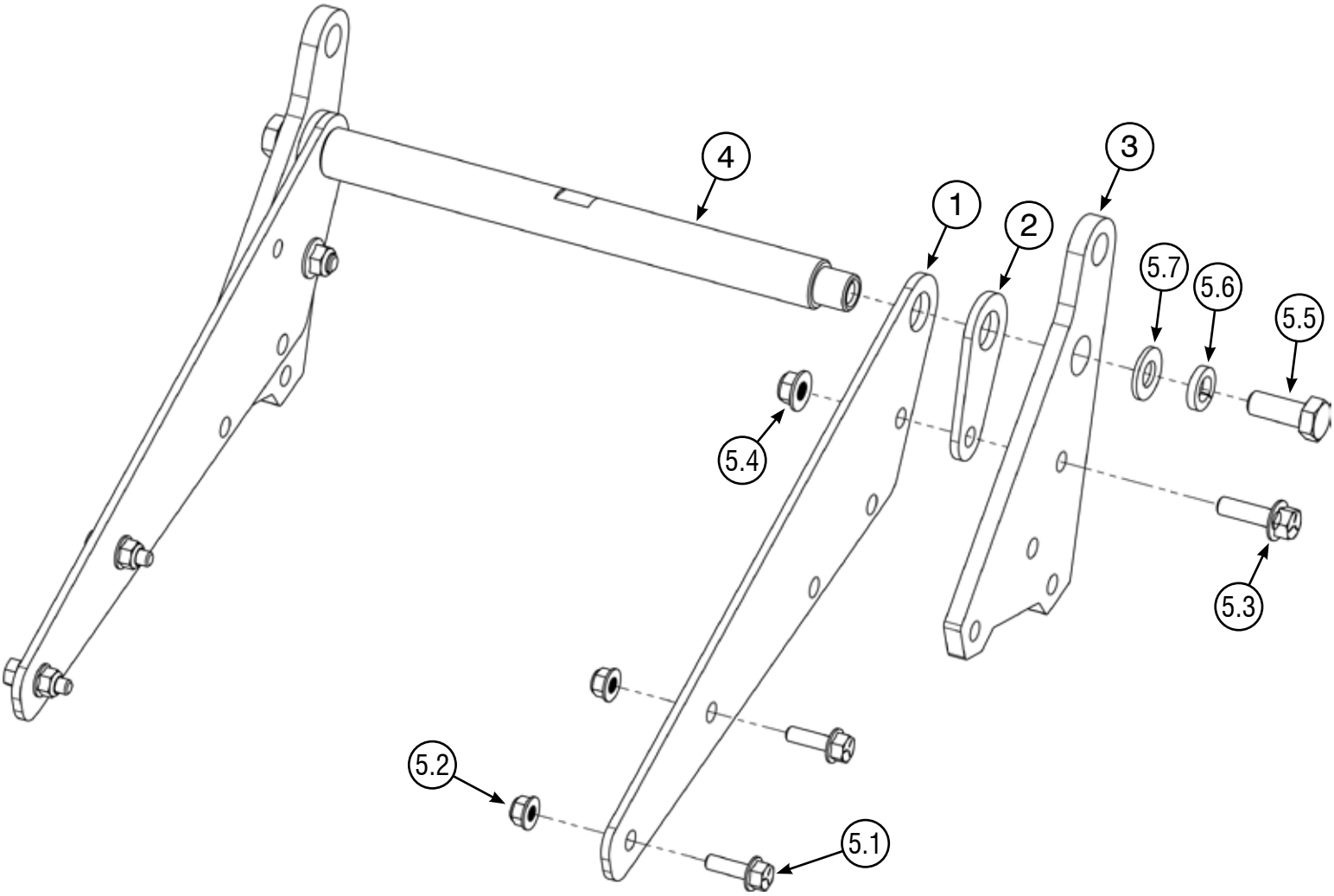

Kit Components:					
Item #	**Qty.**	**Description**	**Item #**	**Qty.**	**Description**
1	2	4” Gusset Plate (106434)	5.2	4	5/16”-18 Hex Flange Nylock Nut
2	2	Level Kit Spacer (106329)	5.3	2	3/8”-16 x 1.25” Hex Bolt Flange
3	2	4” Level Ear (106318)	5.4	2	3/8”-16 Hex Flange Nylock Nut
4	1	Level Kit Rod (106399)	5.5	2	1/2”-13 X 1.25” Hex Bolt
5	1	Hardware Kit (HK-446)	5.6	2	1/2” Lock Washer
5.1	4	5/16”-18 X 1.00” Hex Bolt Flange	5.7	2	1/2” Flat Washer

©2025 Copyright Kappers Fabricating, Inc. All rights reserved

06/17/25

INSTALLATION INSTRUCTIONS

Notice

Torque bolts to ANSI Specs (or OEM specs if applicable), unless otherwise stated. After the first use and at the start of each season, check torque.

Note: Make sure all hardware needed to complete this mount is in the package. Thoroughly read through and understand the instructions before installing.

Installation Instructions

1. If installed, remove pin attachment brackets (C) and hardware (A and B) as shown in **Figure 1**. If not installed, proceed to **Step 2**.

   Note: Save hardware (A and B) for reuse in Step 5.

2. Loosely assemble gusset (1), spacer (2), and ear (3) onto rod (4) using bolts (5.5), lock washers (5.6), and flat washers (5.7). Refer to **Figure 2** for orientation.

3. Loosely install bolts (5.3) and lock nuts (5.4) through the ear (3), spacer (2), and gusset (1). See **Figure 2**.

4. Place the subassembly onto the push tube. Ensure gusset (1) is placed inside the rib on the push tube. Loosely install front bolts (5.1) and lock nuts (5.2) as shown in **Figure 3**.

5. Reinstall bolts (A) and nuts (B) removed in **Step 1** into their original positions. See **Figure 4**.

6. Once all hardware is started, tighten all hardware evenly. See **Figure 5**.

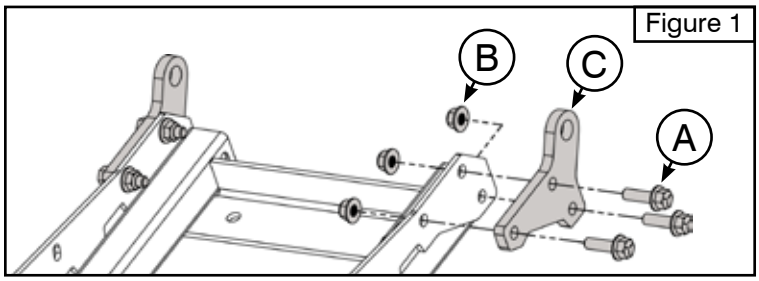

Figure 1

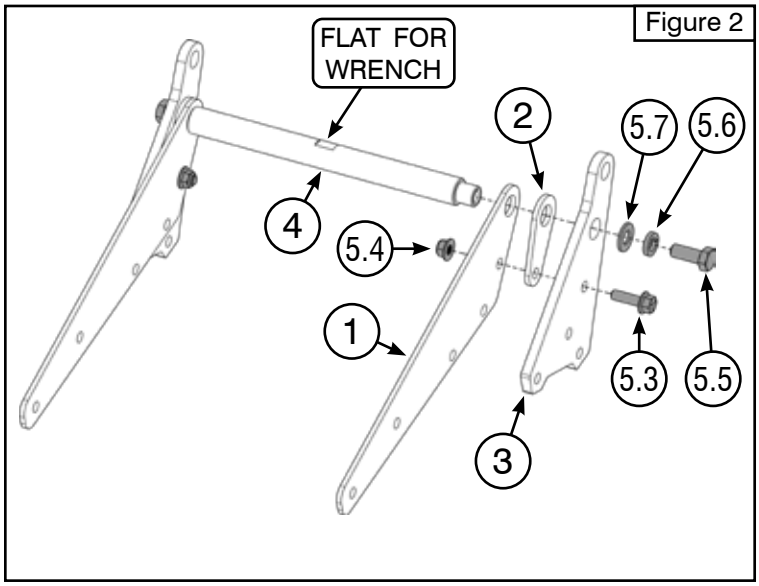

Figure 2

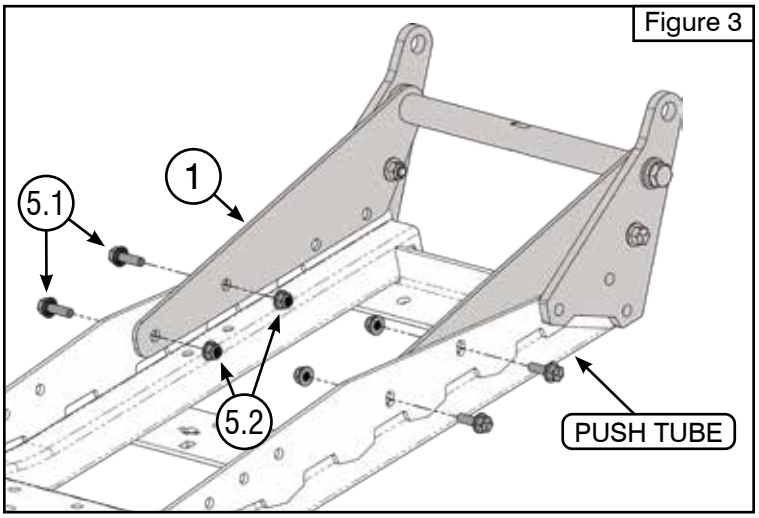

Figure 3

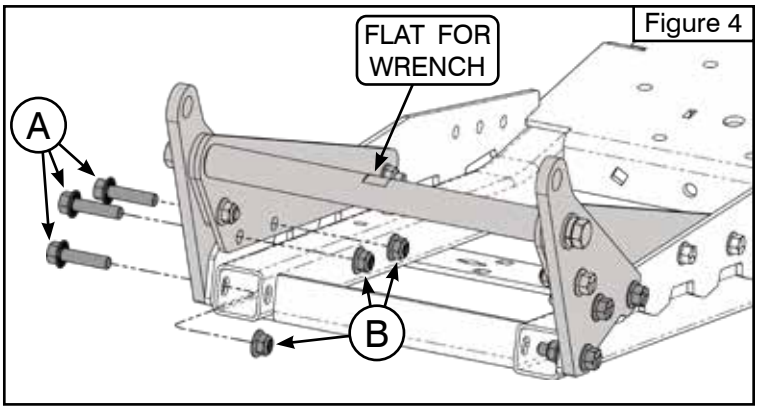

Figure 4

Note: When tightening bolts (5.5), use a 7/8" wrench or an adjustable wrench on the flat spot of rod (4) to prevent it from rotating. See **Figures 2 and 4.**

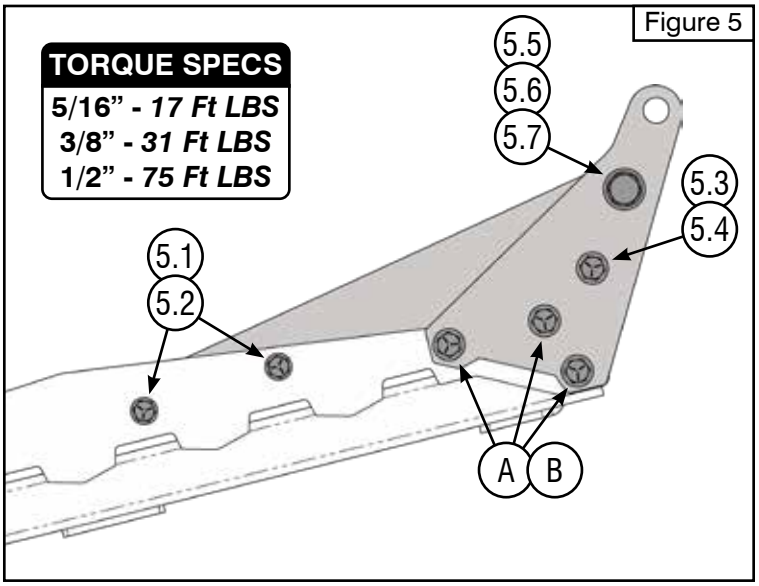

Figure 5

©2025 Copyright Kappers Fabricating, Inc. All rights reserved

PRO 2.0 - 6 INCH LEVELING KIT

Plow Accessory PART #106326 Rev C

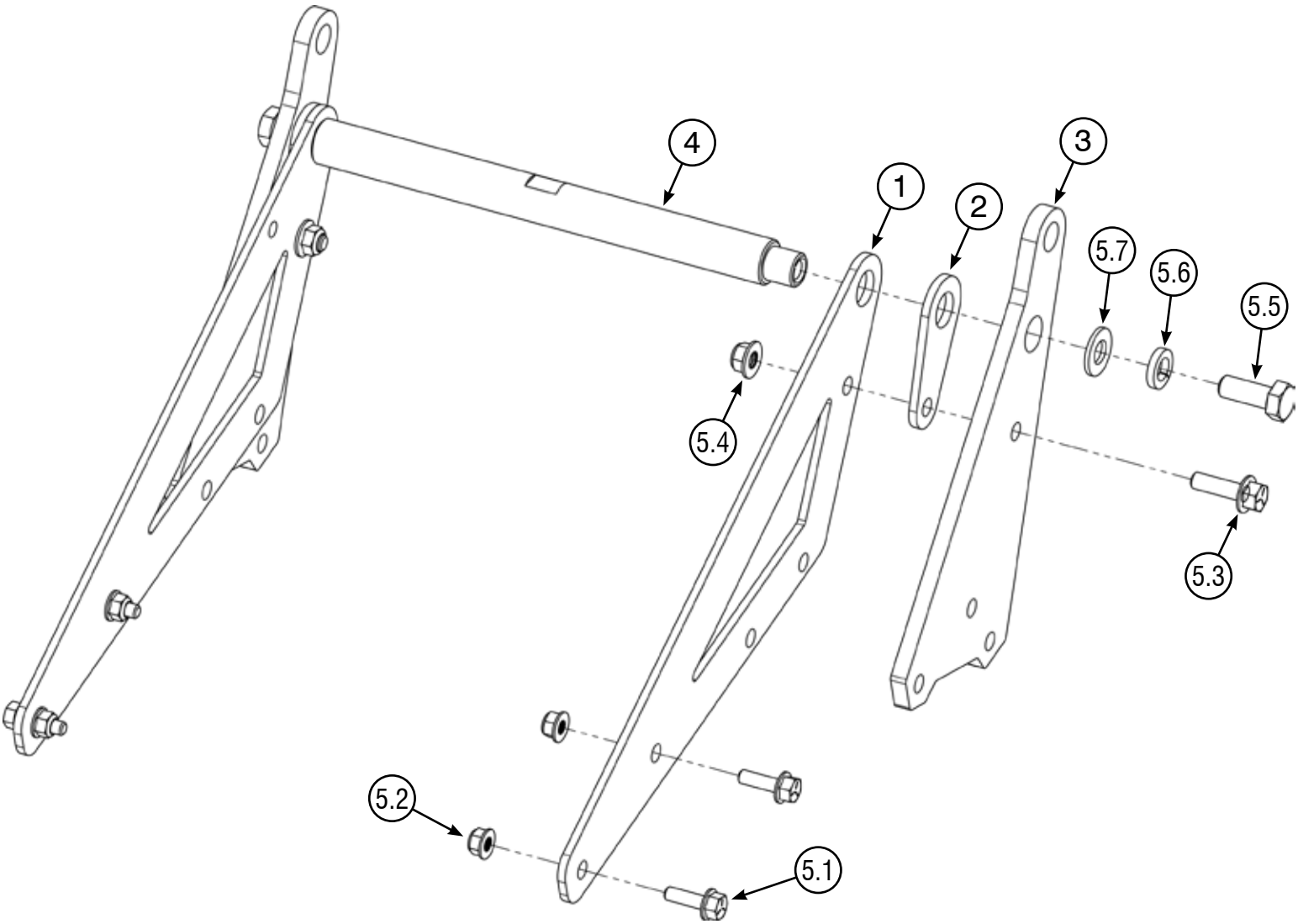

Kit Components:

Item #	Qty.	Description	Item #	Qty.	Description
1	2	6” Gusset Plate (106448)	5.2	4	5/16”-18 Hex Flange Nylock Nut
2	2	Level Kit Spacer (106329)	5.3	2	3/8”-16 x 1.25” Hex Bolt Flange
3	2	6” Level Ear (106328)	5.4	2	3/8”-16 Hex Flange Nylock Nut
4	1	Level Kit Rod (106399)	5.5	2	1/2”-13 X 1.25” Hex Bolt
5	1	Hardware Kit (HK-446)	5.6	2	1/2” Lock Washer
5.1	4	5/16”-18 X 1.00” Hex Bolt Flange	5.7	2	1/2” Flat Washer

©2025 Copyright Kappers Fabricating, Inc. All rights reserved

12/24/25

INSTALLATION INSTRUCTIONS

Notice

Torque bolts to ANSI Specs (or OEM specs if applicable), unless otherwise stated. After the first use and at the start of each season, check torque.

Note: Make sure all hardware needed to complete this mount is in the package. Thoroughly read through and understand the instructions before installing.

Installation Instructions

1. If installed, remove pin attachment brackets (C) and hardware (A and B) as shown in **Figure 1**. If not installed, proceed to **Step 2**.

   Note: Save hardware (A and B) for reuse in Step 5.

2. Loosely assemble gusset (1), spacer (2), and ear (3) onto rod (4) using bolts (5.5), lock washers (5.6), and flat washers (5.7). Refer to **Figure 2** for orientation.

3. Loosely install bolts (5.3) and lock nuts (5.4) through the ear (3), spacer (2), and gusset (1). See **Figure 2**.

4. Place the subassembly onto the push tube. Ensure gusset (1) is placed inside the rib on the push tube. Loosely install front bolts (5.1) and lock nuts (5.2) as shown in **Figure 3**.

5. Reinstall bolts (A) and nuts (B) removed in **Step 1** into their original positions. See **Figure 4**.

6. Once all hardware is started, tighten all hardware evenly. See **Figure 5**.

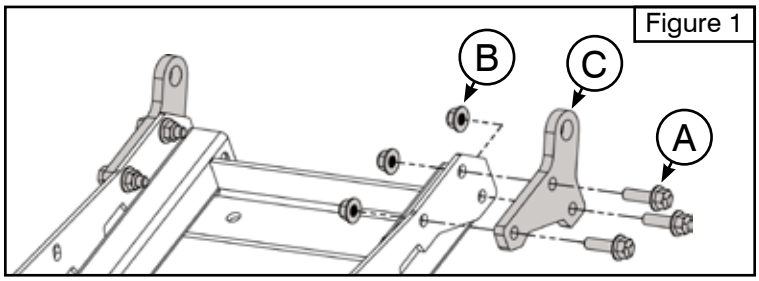

Figure 1

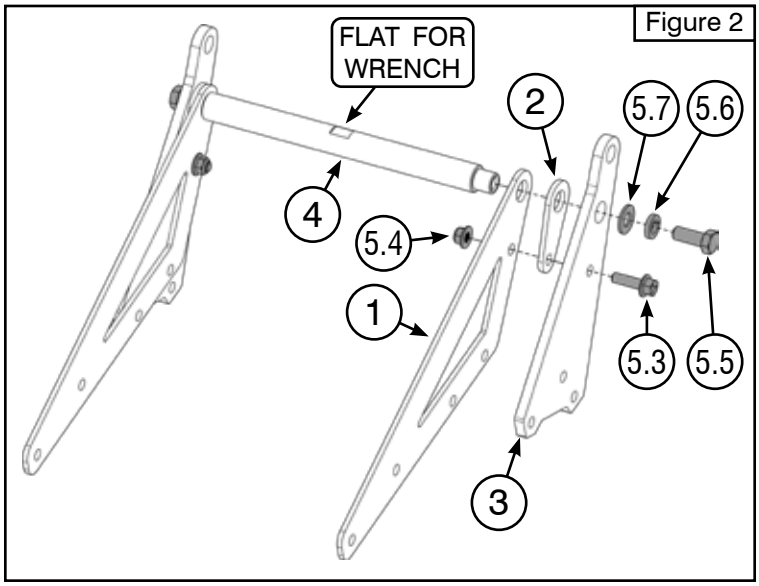

Figure 2

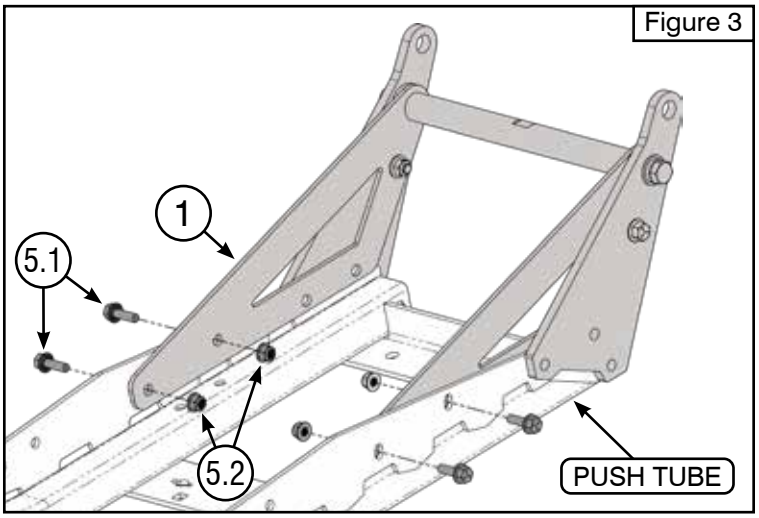

Figure 3

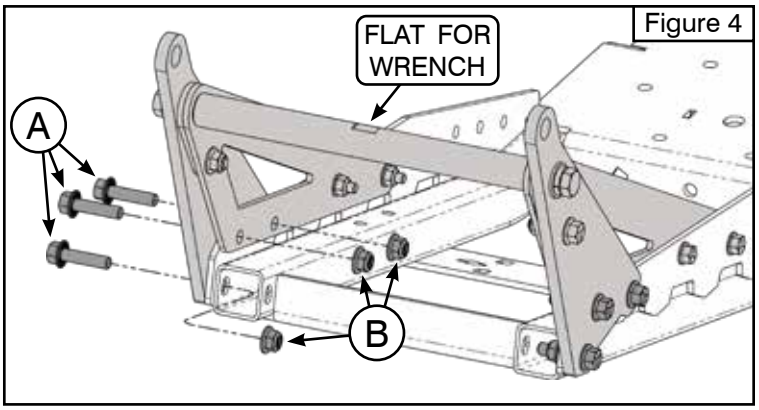

Figure 4

Note: When tightening bolts (5.5), use a 7/8" wrench or an adjustable wrench on the flat spot of rod (4) to prevent it from rotating. See **Figures 2 and 4.**

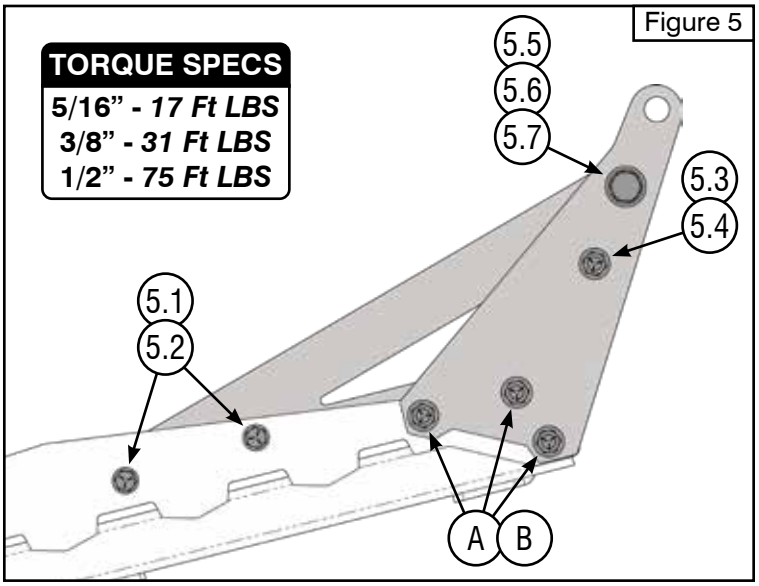

Figure 5

©2025 Copyright Kappers Fabricating, Inc. All rights reserved

WN-2500 / WN-3500 / WN-4500 / WN-6000 / WN-9000 Winch guide

Do not discard packaging until product has been successfully installed.

Stopper

Fairlead

Wiring Accessory Kit

Rocker Mount
(WN-2500 and WN-3500 only)

Clevis Pin and Hook

Winch (WN-6000 shown)

***Mounting Plate**

**May require modification for specific use or, best option, replace with a machine specific mounting plate.*

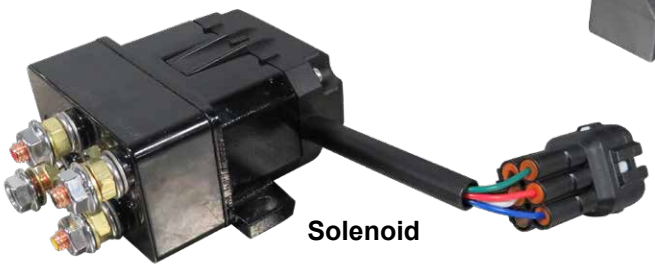

Solenoid

Hand Strap

Dash Mount Switch
(WN-4500 and WN-6000 only)

Rocker Switch
(WN-2500 and WN-3500 only)

© 2018 SuperATV.com®. All Rights Reserved.

(kit contents continue on following page)

(kit contents continued)

Wireless Remote

Yellow and Blue Wire:

Model	Length
2500	2-3/4’
3500	3’
4500	
6000	

Black and Red Wire:

Model	Length
2500	5-3/4’
3500	8’
4500	
6000	

when LED lights are flashing at a fixed rate, remove Cover and replace (2) AAA batteries

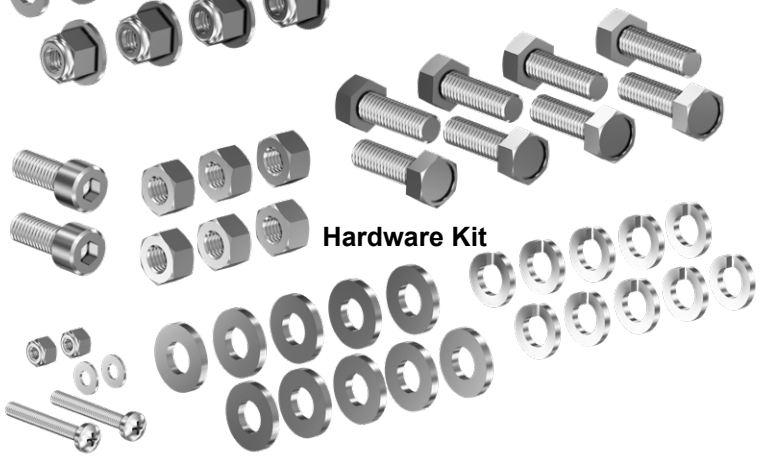

RECOMMENDED WINCH ACCESSORIES (not included):

Gloves: Protect hands when handling Synthetic Rope.

Anchor Strap/Chain: 5,000 lbs. - 10,000 lbs. high tensile strength strap.

Blanket: Place on Synthetic Rope to absorb energy in event of a failure.

INTRODUCTION:

Congratulations on your purchase of a high quality winch designed and built to strict specifications. Proper use and maintenance will ensure years of reliable, satisfying service.

WARNING Read, study, and follow all instructions before operating winch. Failure to heed these instructions may result in personal injury, death, and/or property damage.

A Winch can develop tremendous pulling forces. If Winch is used improperly, or in an unsafe manner, personal injury, death, and/or property damage can occur. Throughout this operating manual CAUTION, WARNING, and DANGER symbols are present. Pay particular attention to notes preceded by these symbols as they are written for your safety. User is responsible for safe operation of this device.

CAUTION Indicates a potentially hazardous situation, which if not avoided, may result in minor or moderate injury. This symbol is also used to alert user against unsafe practices.

WARNING Indicates a potentially hazardous situation, which if not avoided, may result in death or serious injury.

WIRING:

User may shorten wire length with components included in Wiring Accessory Kit.

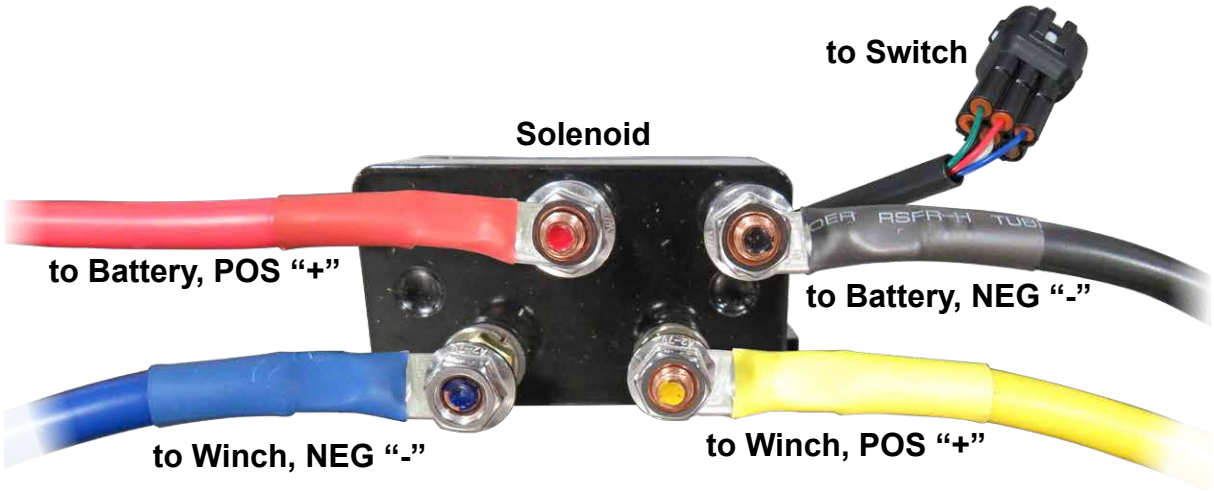

use (2) wrenches, one on each Nut, when tightening Terminals Posts; do not overtighten

torque all wiring connections to a maximum 35 in/lbs; use hand tools only

GETTING TO KNOW YOUR WINCH:

A winch is a powerful piece of machinery. For safe and confident operation, it is important to understand basic winch operations and specifications. See below for details on winch components and usage. Practice using winch before an actual situation occurs.

Winch has been engineered with several patented technologies.

Motor: Motor is powered by a 12 volt battery. Motor provides power to Mechanical Gear Mechanism which turns Winch Drum and winds Synthetic Rope.

Winch Drum: Cylinder on which Synthetic Rope is stored. Winch Drum feeds or winds Synthetic Rope depending on Winch switch direction.

Synthetic Rope: Designed specifically for Winches load capacity and is looped at end to accept clevis hook pin. Synthetic Rope feeds onto Winch Drum, through Fairlead, when in "under wind" position.

Fairlead: When operating Winch at an angle, Fairlead guides Synthetic Rope onto Winch Drum and minimizes damage/abrasion from winch mount or bumper.

Mechanical Gear System: Converts Motor power into extreme pulling forces.

Braking System: Braking action is automatically applied to Winch Drum when Motor is stopped and there is load on Synthetic Rope. A separate mechanical brake applies braking action.

Control System: Winch can be controlled by using Power Cord/Switch Assembly or through Remote Control.

Free Spooling Clutch: Allows user to manually disengage ("CLUTCH OUT") Winch Drum from Mechanical Gear System; free spool. Engaging clutch ("CLUTCH IN") locks Winch into Mechanical Gear System.

Solenoid: Power from vehicle battery flows through a weather-sealed switch before being directed to Motor.

Rocker Switch: Power switch leads have a dual switch for powering in or powering out Winch Drum. Rocker Switch allows user to stand clear of Synthetic Rope when Winch is under load.

Wireless Remote Control: Allows user to operate Winch from 50' away. To turn on, push both buttons at once until LED lights up. To turn off, push both buttons at once until LED light goes out. ***Rocker Switch must be hooked up and key on power wire connected for remote to work.***

To turn ON:

- **press and hold (2) buttons simultaneously until LED indicator turns on**

To turn OFF:

- **press and hold (2) buttons simultaneously until LED indicator shuts off**
- **remote will power off automatically after 2 minutes of inactivity**

Mounting Plate: Plate that can mount to most flat surfaces such as trailers, step bumpers, truck beds, etc. Fairlead mounting holes included.

Pulley/Snatch Block (not included): Doubles pulling power of Winch or changes pulling direction without damaging Synthetic Rope. When pulling over 70% of rated line pull, it is recommended to use double line and snatch block.

SAFETY PRECAUTIONS:

Failure to heed these warnings and cautions may result in personal injury and/or property damage.

WARNING - Do not exceed rated capacity. *See "Performance Data", page 6.*

WARNING - Do not use Winch to lift vertically or as a hoist.

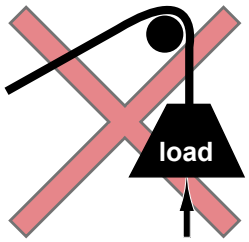

WARNING - Do not use Winch to pull or move people in any way.

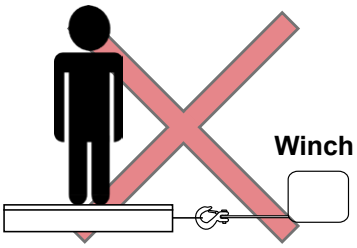

WARNING - Never cut, weld, or modify any part of Winch or Synthetic Rope.

WARNING - A minimum of (5) wraps of Synthetic Rope around Winch Drum is necessary for pulling and holding rated load.

WARNING - Keep yourself and others a safe distance and to a side when Synthetic Rope is under tension.

WARNING - Synthetic Rope may break before Motor stalls. For heavy loads at or near rated capacity, use a pulley block/snatch block to reduce load on Synthetic Rope.

WARNING - When under load, never step over or go near Synthetic Rope.

WARNING - Don't move vehicle to pull a load (towing) on Synthetic Rope. This can result in Synthetic Rope breakage.

WARNING - Avoid "shock loads" by using control switch intermittently to take up slack in Synthetic Rope. "Shock loads" can exceed rated capacity for Synthetic Rope and Winch Drum.

WARNING - Apply blocks to wheels of vehicle when on an incline.

(Safety Precautions continue on following page)

SAFETY PRECAUTIONS (continued):

WARNING

- Never connect Synthetic Rope back onto itself.

CAUTION

- Use Hand Strap when handling Clevis Hook. Use gloves to protect hands when handling Synthetic Rope. Never let Synthetic Rope slide through bare hands.

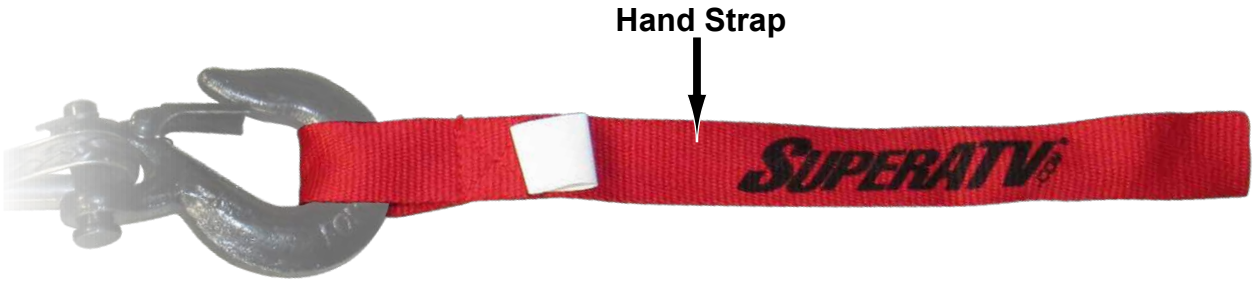

WARNING

- When re-spooling, ensure that Synthetic Rope spools in “under wind” position with Synthetic Rope entering Winch Drum from bottom, not top. To spool correctly, keep a slight load on Synthetic Rope while pushing remote button to draw in Synthetic Rope. Walk toward Winch while not allowing Synthetic Rope to slide through hands. Do not let hands get within 12″ of Winch while re-spooling. Turn off Winch and repeat procedure until only a few feet of Synthetic Rope remain. Disconnect Remote Control and finish spooling by hand; rotate Winch Drum by hand with Clutch disengaged. Keep hands clear of Fairlead and Winch Drum while Winch is under power.

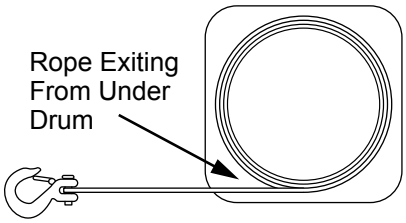

Side cutaway view of Winch

PERFORMANCE DATA:

Model WN-2500; 12V DC Motor, 1hp output

Line Pull (lbs - kgs)	Line Speed (Ft/min, M/min)	Motor (amps)	Pull by Layer (layer/lbs - kgs)
0	16.73 (5.10)	15	1/2500 (1134)
500 (227)	13.12 (4.00)	39	2/2045 (928)
1000 (454)	11.15 (3.40)	68	3/1731 (785)
1500 (680)	9.84 (3.00)	99	4/1500 (680)
2000 (907)	7.22 (2.20)	134	5/1324 (600)
2500 (1134)	4.92 (1.5)	158	6/1184 (537)

Model WN-3500; 12V DC Motor, 1.2hp output

Line Pull (lbs - kgs)	Line Speed (Ft/min, M/min)	Motor (amps)	Pull by Layer (layer/lbs - kgs)
0	17.52 (5.34)	21	1/3500 (1590)
500 (227)	15.55 (4.74)	41	2/2640 (1198)
1000 (454)	14.37 (4.38)	63	3/2320 (1052)
1500 (680)	12.99 (3.96)	83	4/2040 (925)
2000 (907)	10.43 (3.18)	100	
2500 (1134)	9.45 (2.88)	130	
3000 (1361)	7.87 (2.40)	156	
3500 (1588)	6.87 (2.1)	185	

Model WN-4500; 12V DC Motor, 1.3hp output

Line Pull (lbs - kgs)	Line Speed (Ft/min, M/min)	Motor (amps)	Pull by Layer (layer/lbs - kgs)
0	18.70 (5.70)	20	1/4500 (2045)
1000 (454)	16.07 (4.90)	61	2/3600 (1636)
2000 (907)	14.27 (4.35)	107	3/3130 (1423)
3000 (1361)	10.17 (3.10)	148	4/2745 (1248)
4000 (1814)	6.99 (2.13)	202	
4500 (2041)	6.10 (1.86)	267	

Model WN-6000; 12V DC Motor, 1.9hp output

Line Pull (lbs - kgs)	Line Speed (Ft/min, M/min)	Motor (amps)	Pull by Layer (layer/lbs - kgs)
0	13.45 (4.10)	13	1/6000 (2728)
1500 (681)	8.86 (2.70)	55	2/4615 (2097)
3000 (1361)	7.08 (2.16)	112	3/3845 (1748)
4500 (2045)	5.51 (1.68)	166	4/3205 (1457)
6000 (2727)	3.94 (1.2)	278	

GENERAL TIPS FOR SAFE OPERATION:

- Winch is at rated capacity when spooling first Synthetic Rope layer onto Winch Drum. Overloading can damage components. For loads over 70% of rated line pull, it is recommend to use a pulley block/snatch block to double rope line. When doubling line, number of layers on Winch Drum is reduced and load on Synthetic Rope is reduced by as much as 50%. Attach to frame or other load bearing component when doubling line back to vehicle.

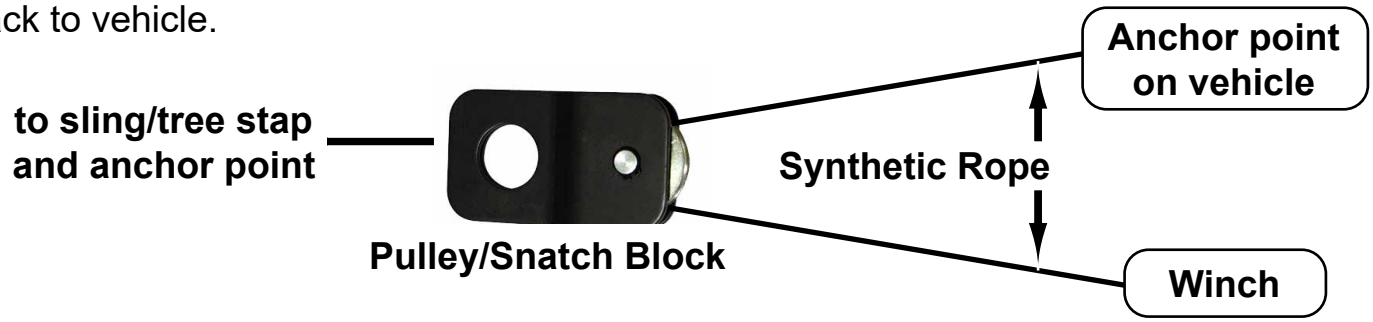

- To minimize battery drain and maximize power and speed of Winch, keep vehicle engine running during winching. Battery may be drained if winch is used for a considerable amount of time with engine off.
- Know all features before actual use. Become familiar with rigging techniques, sounds made under various loads, way Synthetic Rope spools onto Winch Drum, etc. by performing several test runs.
- Inspect all components, hardware, and electrical connections before each use. If Synthetic Rope is frayed or damaged, replace immediately. Use only manufacturers replacement rope. Replace or remove any component that appears to be damaged, worn, or operating abnormally.
- Never connect Synthetic Rope back onto itself. Always use a snatch block, sling, or chain of suitable strength.
- Pull only on parts of vehicle as specified by vehicle manufacturer.
- Use only attachments and/or adapters supplied by manufacturer.
- Test run Winch in (2) directions before winching.

⚠ CAUTION - If Motor stalls, stop winching immediately. Electric winches are designed for intermittent use. Do not use in constant duty applications. Keep duration of winching pulls as short as possible: Do not use for more than (1) minute when at or near rated load. If Motor becomes hot to touch, stop winching immediately. Allow Motor to cool before resuming.

⚠ CAUTION - Never disengage Free Spooling Clutch when a load is on Winch.

WINCH ASSEMBLY AND MOUNTING:

Winch is designed with a standard bolt pattern for its class. Different mounting kits are available that utilize this pattern.
When installing, ensure that Mounting Plate installs to a flat surface so Motor, Winch Drum, and Gear Housing are properly aligned. Proper alignment allows for even distribution of full rated loads.

Universal Mounting Plate is supplied. Machine specific Mounting Plates are available at www.SuperATV.com

1. Install supplied Fairlead to supplied Mounting Plate with supplied hardware.
2. Install Winch to Mounting Plate with supplied hardware:
- Set Free Spooling Clutch to “OUT” and pull out a few inches of Synthetic Rope.
- Feed Synthetic Rope through opening in front of Mounting Plate and through Fairlead.
3. Make electrical and component connections; *See SuperATV instructions*.

⚠ CAUTION Remove all jewelry and wear eye protection when making battery connections. Batteries contain flammable and explosive gases. Avoid leaning over battery.

4. Assemble Clevis Hook to Synthetic Rope.
- Remove Pin from Clevis Hook and connect Clevis Hook to Synthetic Rope.
- Reinstall Pin to Clevis Hook.
5. Install Stopper to Synthetic Rope.
6. Install Hand Strap to Clevis Hook.
7. Check Winch Drum for proper rotation:
- Set Free Spooling Clutch to “OUT” and pull out some Synthetic Rope.
- Set Free Spooling Clutch to “IN” and press “OUT” button on Rocker Switch. If properly installed, Winch Drum should be turning and *releasing* Synthetic Rope. If Winch Drum is turning and *collecting* more Synthetic Rope, reverse leads on Motor. Repeat and check rotation.

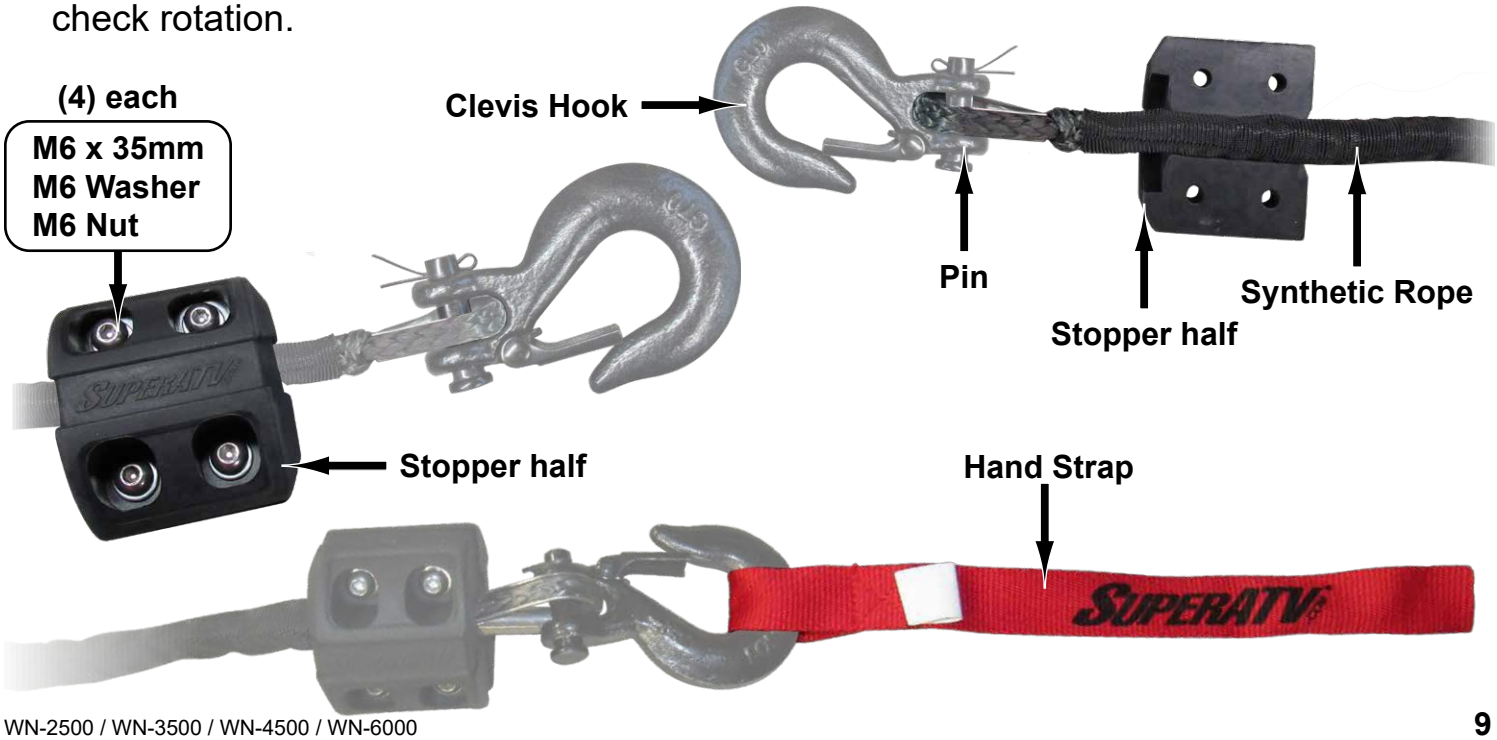

ROCKER MOUNTING (WN-2500 and WN-3500 only):

Rocker can be mounted to Handlebar as shown below.

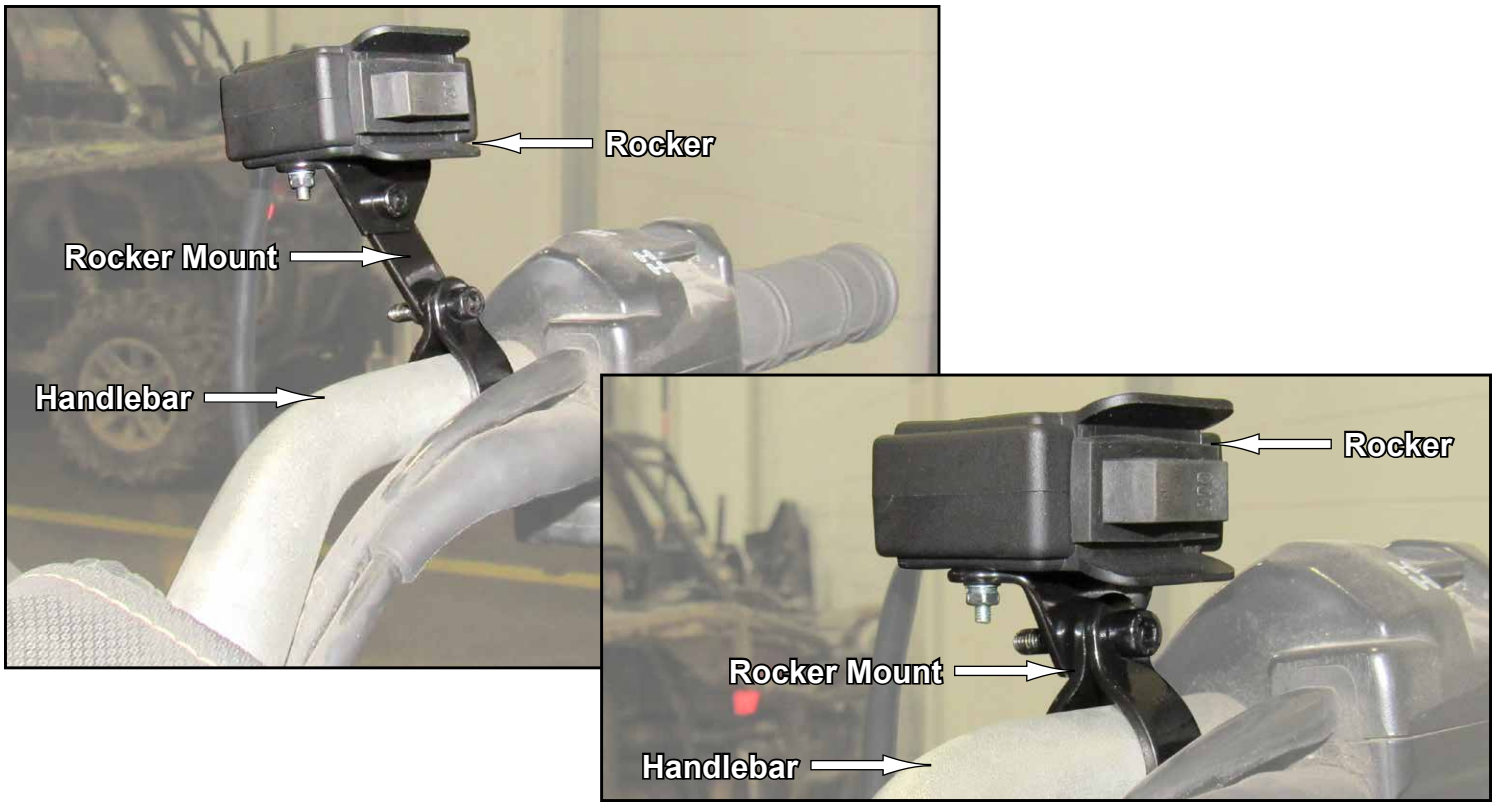

- Switch can be removed and installed into Dash
- cutout to be size shown
- insulate and waterproof any exposed wiring

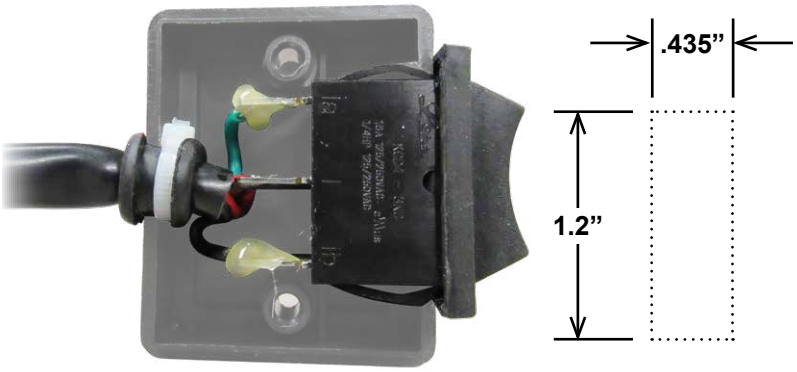

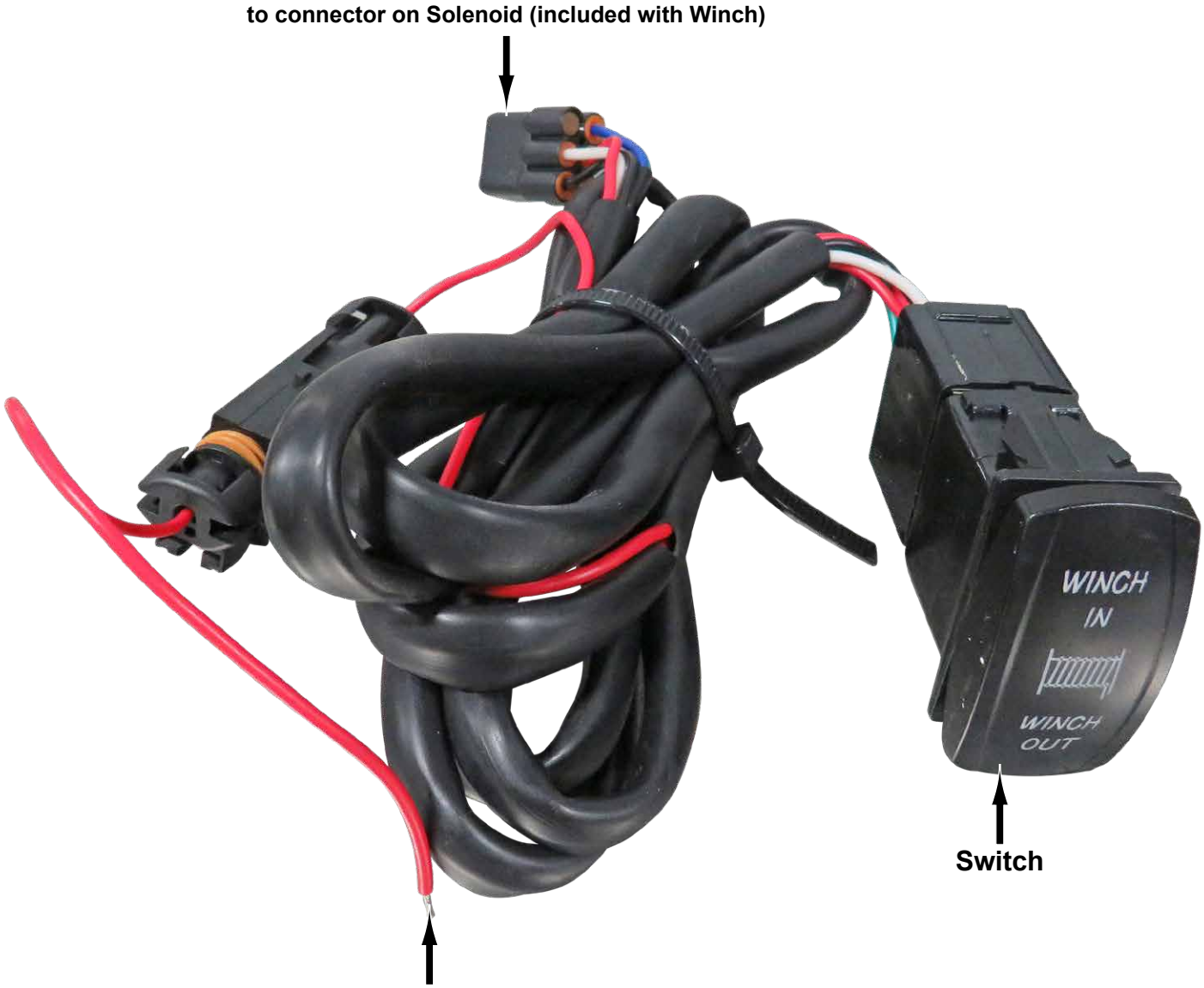
to connector on Solenoid (included with Winch)
WINCH
IN
WINCH
OUT
Switch
Red Wire must be connected to a switched 12V source (Ignition Key)

RIGGING TECHNIQUES:

Locate a suitable anchor such as a strong tree trunk or boulder. Always use a sling/tree strap as an anchor point.

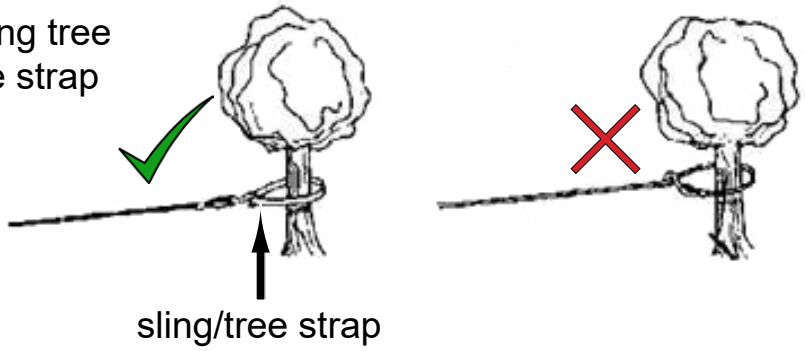

Do not winch from an acute angle. Synthetic Rope will pile up on one side of Winch Drum causing damage to Synthetic Rope and Winch.

Short pulls from an angle can be used to straighten vehicle. Long pulls must be done with Synthetic Rope at a 90° angle to winch/vehicle.

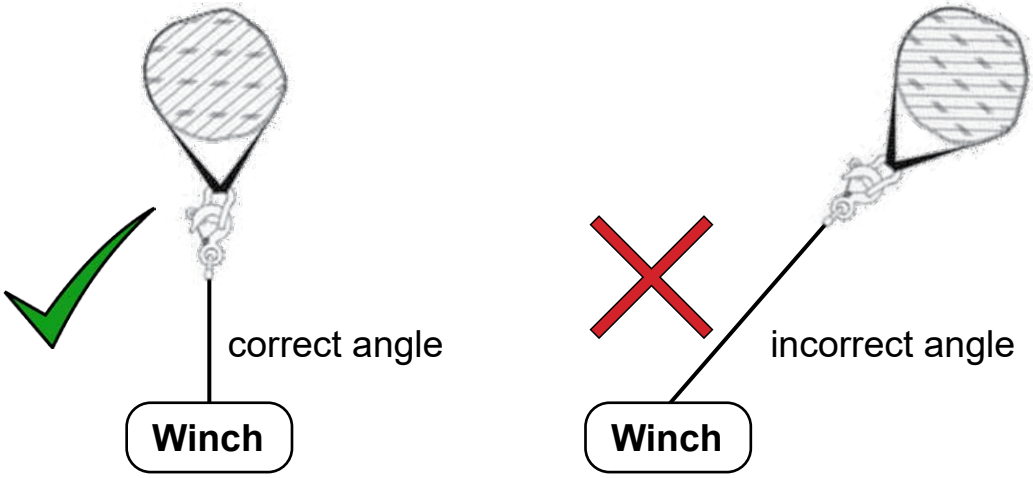

To absorb energy in event of Synthetic Rope failure, place a blanket or jacket over Synthetic Rope approximately 5ft - 6ft from Clevis Hook before pulling a heavy load. Open vehicle hood for more protection.

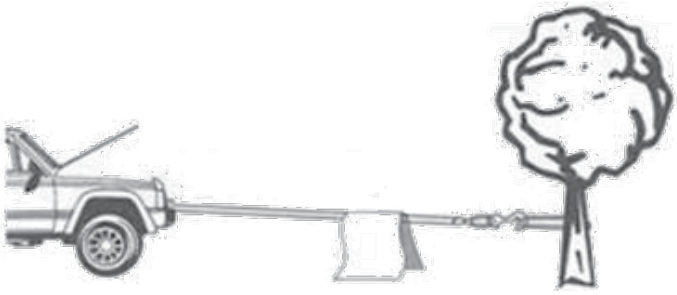

OPERATING WINCH:

1. Take time to assess situation and thoroughly plan pull.
2. Set Free Spooling Clutch to “CLUTCH OUT” position.
3. Pull Synthetic Rope and attach to vehicle to be winched. Wear gloves and use Hand Strap.

CAUTION Always leave minimum of (5) turns of Synthetic Rope on Winch Drum. Review “Safety Warnings” section of manual before continuing.

4. Secure Clevis Hook to anchor point: Sling, chain or snatch block. Do not attach Clevis Hook back onto Synthetic Rope.
5. Set Free Spooling Clutch to “IN” position.
6. Start vehicle engine so that battery is being charged while winching.
7. Slowly winch in Synthetic Rope just enough to take up slack.
8. Inspect Synthetic Rope. Make sure there are minimum 5 wraps of Synthetic Rope around Winch Drum.
9. To absorb energy in event of Synthetic Rope failure, place a blanket or jacket over Synthetic Rope approximately 5ft - 6ft from Clevis Hook. Open vehicle hood for more protection.
10. Clear area. Make sure all spectators are away and that no one is directly in front, behind vehicle, or anchor point.
11. Vehicle to be winched should be placed in neutral and emergency brake released. Only release brake pedal when Synthetic Rope is under full tension.
12. While standing aside and clear of tow path, use Rocker Switch or Wireless Remote Control to control winching. If required, wait until Motor stops before reversing direction.

- Be sure Synthetic Rope is winding evenly and tightly around Winch Drum.
- Vehicle being winched can be slowly driven to add assistance to winching.
- Avoid shock loads; keep Synthetic Rope under tension. This can damage components and vehicles.

13. Winch is meant for intermittent use. Under full load with a single line rig do not power “in” for more than (1) minute without letting Motor cool down for a few minutes before resuming winching.
14. Once vehicle is on stable ground, set brakes and place vehicle in park. Winching operation is complete.
15. Set Free Spooling Clutch to “OUT” to release tension on Synthetic Rope. Winch is not meant to hold loads for long periods of time.
16. Disconnect Synthetic Rope from vehicle or anchor.
18. Set Free Spooling Clutch to “IN” position and rewind Synthetic Rope. **Keep hands clear of Winch Drum and components.** Any material already on Winch Drum should be spooled tightly and neatly. Draw out and re-spool if necessary.
19. Secure Hook Strap and Clevis Hook.

TROUBLE SHOOTING:

SYMPTOM	POSSIBLE CAUSE	SUGGESTED ACTION
Motor does not turn on	Rocker Switch not connected properly.	Insert Rocker Switch completely into Controls Splitter Connector. Connect ignition power source.
	Loose battery cable connections.	Tighten nuts on all cable connections.
	Defective Rocker Switch.	Replace.
	Defective Motor.	Check for voltage at armature port with Rocker Switch pressed. If voltage is present, replace Motor.
	Water has entered Motor.	Allow water to drain and Winch to dry. Without a load, operate Winch in short cycles until completely dry.
	Solenoid sticking.	Tap on Solenoid with handle end of screwdriver.
Motor runs but Winch Drum does not turn.	Free Spooling Clutch not engaged.	Set Free Spooling Clutch to “IN” position. If problem persist, contact SuperATV.
Motor runs slowly or without normal power.	Insufficient current or voltage.	Battery is weak and may need charging. Always operate Winch with vehicle running. Corroded and/or loose battery cables should be cleaned and tightened.
Motor overheating.	Winch run time too long.	Periodically allow Winch to cool while operating.
Motor runs in one direction only.	Defective Rocker Switch/ Remote Control.	Repair or replace Rocker Switch/Remote Control.
	Loose battery cable connections.	Corroded and/or loose battery or Motor cable connections should be cleaned and tightened.
Motor runs continuously on its own.	Defective Solenoid, Wireless Receiver, or Remote Control.	Unplug ignition power. Remove negative battery cable from Solenoid.

SYNTHETIC ROPE MAINTENANCE:

- **Minimize abrasion:** Use movable Abrasion Sleeve whenever contact with rocks or other objects occurs. Slide Abrasion Sleeve up and down Synthetic Rope as required. Abrasion will reduce Synthetic Rope Life.
- **Keep clean:** Allowing dirt and debris to enter Synthetic Rope will lead to abrasion.
- **Avoid sharp bends:** A sharp bend will decrease Synthetic Ropes strength substantially under load and may cause damage or failure.

WARNING *If Synthetic Rope has become worn or is beginning to show signs of breaking, replace immediately.* ***Replace with identical part number****. Refer to SuperATV Synthetic Rope instruction when installing.*

MAINTENANCE:

- Check tightness of all mounting hardware and electrical connections periodically.
- Keep Winch clean. Remove all dirt and corrosion as required.
- Do not disassemble Mechanical Gear System. High temperature lithium grease has been applied at the factory. No user maintenance is required.

Winch Dimensions (all dimensions shown are in inches)

Model Number	A	B	C	D	E
WN-2500	12.20	3.08	5.91	4.75	4.6
WN-3500	12.76				
WN-4500	14.52	3.12	7.64		
WN-6000	14.57	2.85	7.4	4.86	4.41

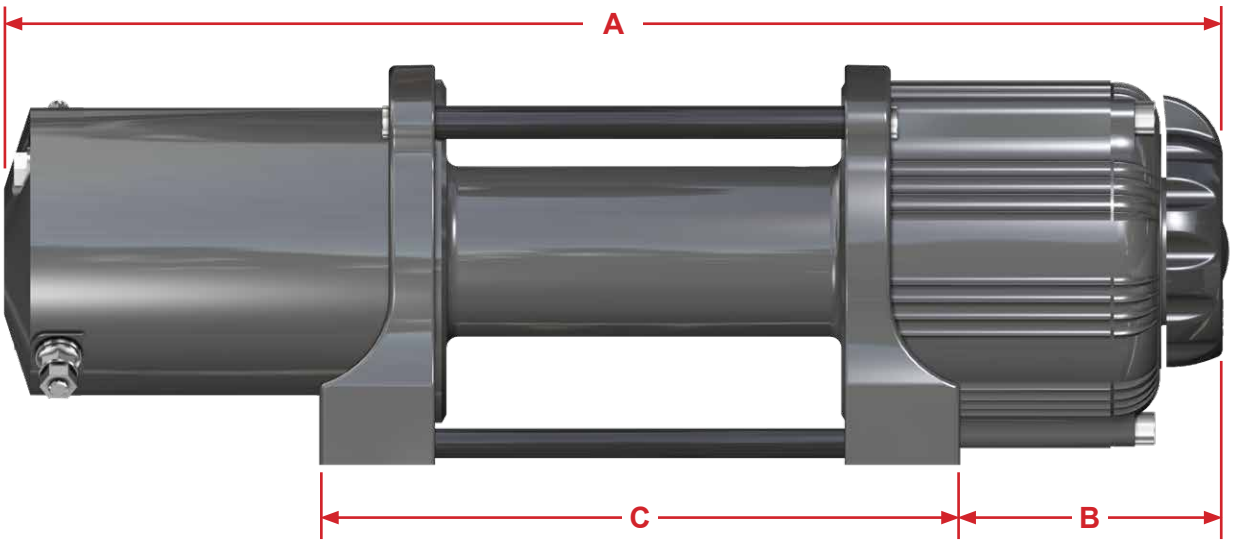

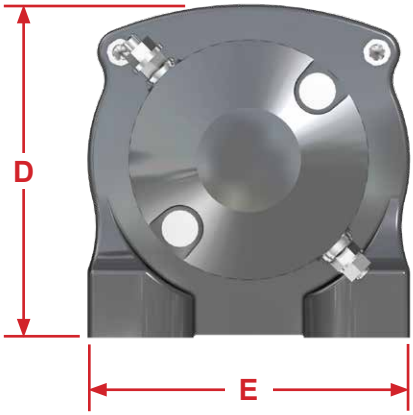

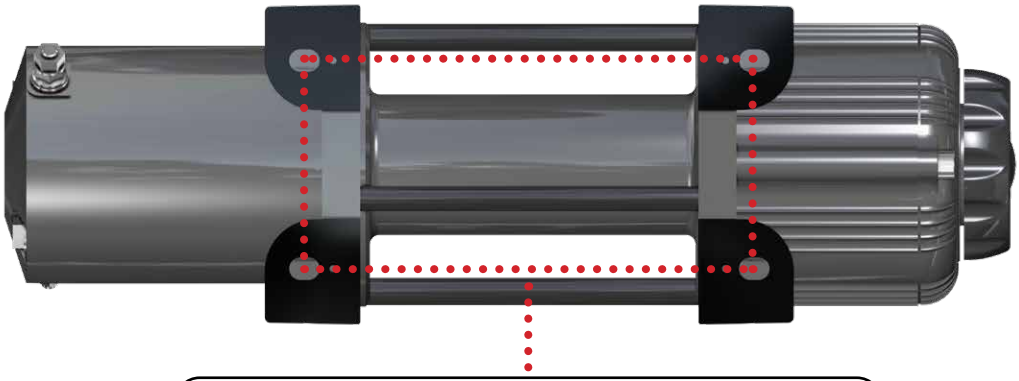

WN-2500 / WN-3500 Mounting Bolt Pattern = 4.75 x 3
WN-4500 Mounting Bolt Pattern = 6.5 x 3
WN-6000 Mounting Bolt Pattern = 6.61 x 3

WN-2500: Synthetic Rope (Diameter x Length): Ø3/16” x 50’ (Ø4.8mm x 15.2m)
WN-3500: Synthetic Rope (Diameter x Length): Ø7/32” x 50’ (Ø5.5mm x 15.2m)
WN-4500: Synthetic Rope (Diameter x Length): Ø1/4” x 50’ (Ø6.3mm x 15.2m)
WN-6000: Synthetic Rope (Diameter x Length): Ø17/64” x 50’ (Ø6.6mm x 15.2m)