MOOSE V-PLOW INSTRUCTIONS
PART# 4501-0841 PUSH TUBE
PART# 4501-0842 LEFT BLADE
PART# 4501-0843 RIGHT BLADE

ITEM	PART#	QTY.	DESCRIPTION
1	2718-100	1	Push Tube Weldment
2	2718PF-R	1	72" V-Plow Right Blade
	2719PF-R	1	82" V-Plow Right Balde
3	2718PF-L	1	72" V-Plow Left Blade
	2719PF-L	1	82" V-Plow Left Blade
4	2718-200	1	Center Support
5	2718-115	2	72" Rubber Flaps
	2719-115	2	82" Rubber Flaps
6	2718-120	2	72" Wear Bar
	2719-120	2	82" Wear Bar
7	2718-400	1	Center skid Pin
8	2550PF	2	Blade Skid
	FLAP HARDWARE (BB2567) per blade		
9	HDW2069	7	5/16 x 3/4 Carriage Bolt
10	HDW9003	7	5/16 Flat Washer
11	HDW7058	7	5/16 Nylock Nut
	WEARBAR HARDWARE (per blade)		
12	HDW2064	5	5/16 x 1 Carriage Bolt
13	HDW7056	5	5/16 Whiz Nut
	BLADE SPRING HARDWARE (BB2718-2)		
14	HDW2369	3	Blade Spring
15	HDW2117	3	3/8 x 6 Eye Bolt
16	HDW9029	3	3/8 USS Flat Washer
17	HDW7061	3	3/8 Nylock Nut
	TRIP PIN PARTS & HARDWARE (BB2718-1)		
18	2713-204	1	Trip Pin
19	HDW9017	2	3/4 Flat Washer
20	HDW2315	2	3/16 x 1 Lynch Pin
21	HDW9110	1	1/2 x 2 Hex Bolt
22	HDW7078	1	1/2 Hex Nut
23	HDW9006	8	5/8 Flat Washer
	MANUAL ADJUST ARMS (BB2718-3)		
24	2718-113	2	Outer Adjustment Tubes
25	2718-114	2	Inner Adjustment Tubes
26	HDW9440	4	5/8 x 2-1/2 Hex Bolt
27	HDW9438	4	5/8 Nylock Nuts
28	HDW2323	2	3/8 Wire Loop Pins

QUESTIONS OR COMMENTS CALL 320-964-1616

7:00 to 4:30 CST Monday thru Thursday

INST2718PF

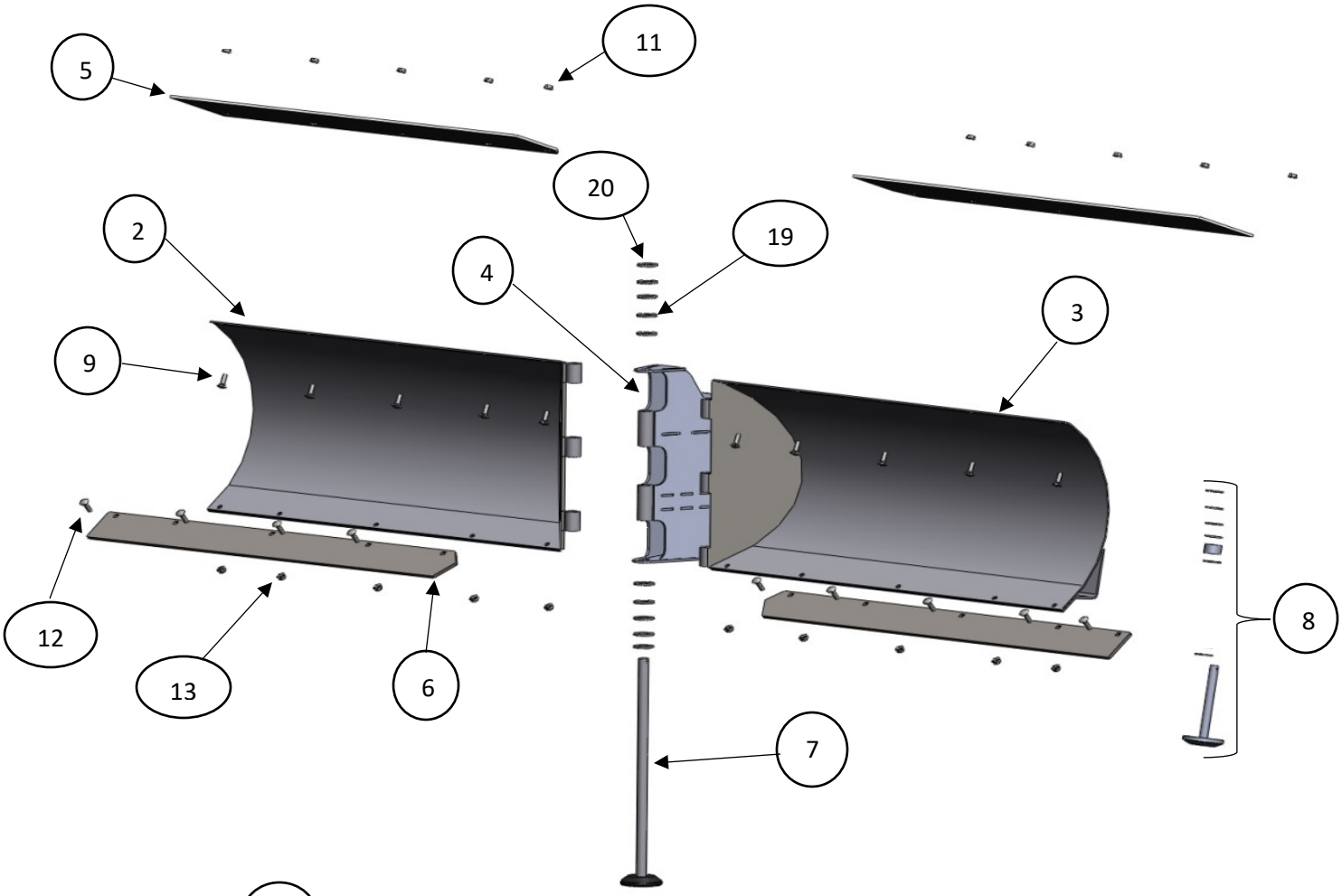
5
11
20
19
2
4
3
9
12
13
6
8
7

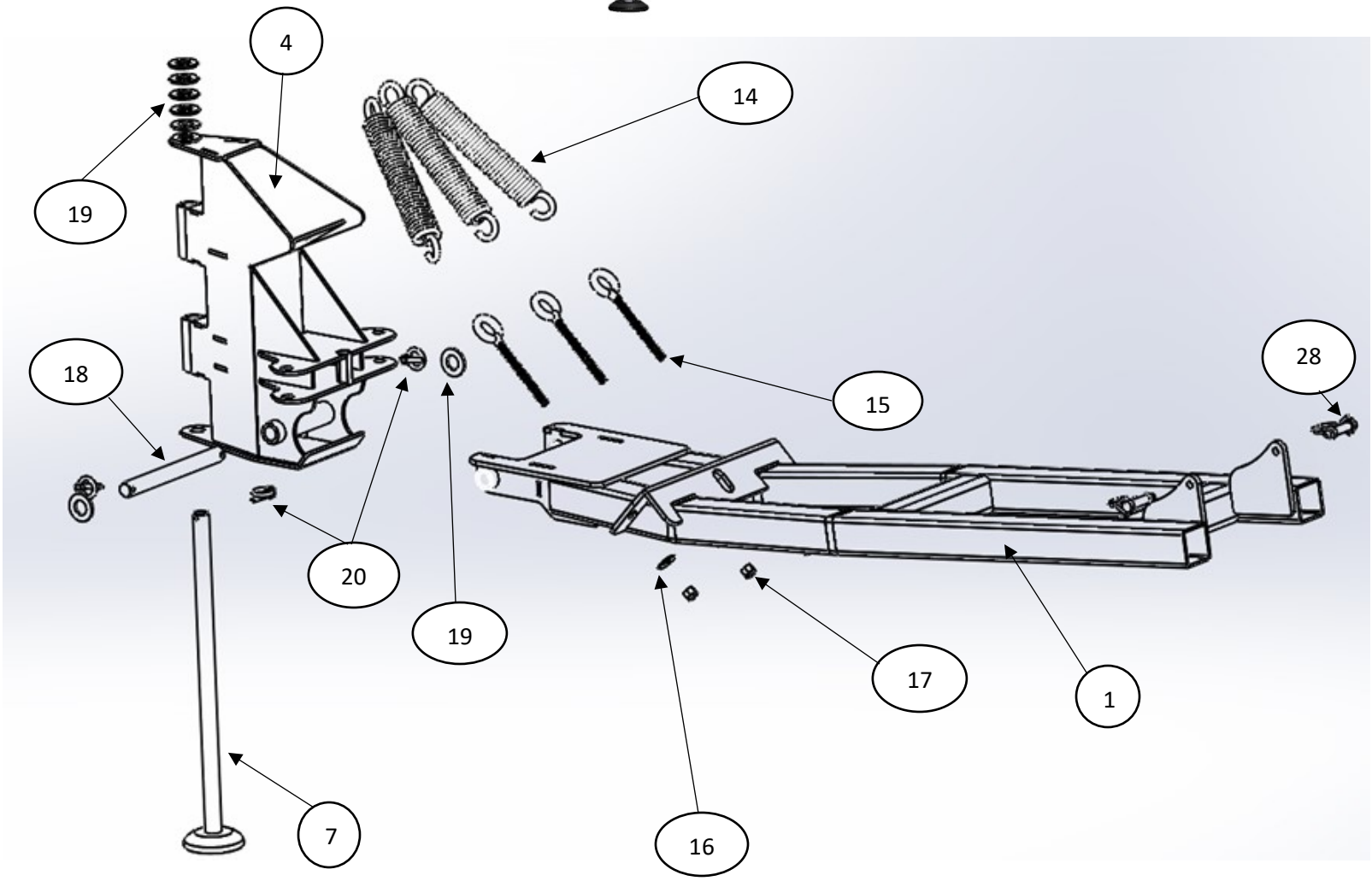
4
14
19
18
15
28
20
19
17
1
7
16

V-PLOW ASSEMBLY

V-Plow comes in three boxes right blade, left blade and push tube. You will need to buy a bottom mount plate for your machine to mount this to if you do not have one installed already.

The blades come with wear bar installed on them and the rubber flap will be zip tied to the blade along with the rubber flap bolt bag (BB2567). The push tube box will have all other hardware and components in it.

INSTALLATION

Open push tube box and remove other parts. The center support will be in a box by it's self, all other hardware and parts are in the parts box.

Remove blades from box <u>do not</u> install flaps at this time. Place right and left blades on ground upside down and slide together. Now set the Center Support down in place. You will use item (4) 2718-400 Center skid to slide up and through all the tubes connecting the blades to center support. (start with two 3/4"washers on center skid post and then slid up and through) You may have to tap through with a rubber mallet. On top use the remainder of the 3/4" washer and 1 – 3/16 hair pin clip. Flip blade on edge so wear bars are on ground.
You can now install the rubber flaps with the hardware that was zip tie with flap. The carriage bolts will go up through the blade and then through the flap with washer and nylock nut on top. NOTE: the center of the flap will overlap each other this is to keep snow dust down even when angled. You may have extra carriage bolts so just disregard those.

You can slide the push tube up in place and use item (15) Trip Pin (2713-204) to connect push tube to center support down at the bottom. Place a 3/4" washer on each side one pin in through and use 2 – 3/16 lynch pins to secure with one on each side.

Hook the blade springs item (11) to the upper part of the center support and then place the eye bolt on the other end and then through the holes on the bracket on the push tube and secure with the 3/8 nylock nuts. NOTE: there are three springs to hook up, the tension can be adjusted by tightening the with the nuts.

Place the manual adjusting tubes in place first with the larger of the tube going to the center support and use the 5/8 x 2-1/2 hex bolt and nylock nut to secure. There are some 5/8 washers you can use to center the tube in the bracket or to keep from rattling to much. Next slide the smaller adjust tube into the larger one and secure the end with the large hole to the blade use the other 5/8 x 2-1/2 hex bolt and nylock nuts. You may also use washers here to center tube in bracket. You will use to of the 3/8 wire loop pins in the adjustment holes.

The 1/2 x 2 hex bolt and nut are trip stop bolt and toward the bottom of the center support there is a 1/2 Nut welded in and this bolt will go up from the bottom into this nut but place regular nut on bolt first and then thread in to center support then adjust to get you correct blade pitch when blade is all the way in back position and tighten jam nut to secure.

The back of the push tubes will pin up to your bottom mount with the remaining two 3/8 wire loop pins.

OPERATING INSTRUCTIONS

READ BEFORE OPERATING

Customer must receive a copy of these instruction at time of purchase

DANGER

Remove bottom mount and or front mount before doing any trail riding

To avoid serious injury and or death:

2 – Always use extreme caution while operating the plow on slopes, grades or slippery surfaces.
3 – Stay clear of blade and other moving parts during operating the plow.
4 – When plow never ram the pile of snow or frozen objects.
5 – Always back up before raising the plow blade.
6 – Beware of your area and avoid hitting frozen objects at all costs.

WARNING

To avoid personal or other injury:

1 – Read your machines operators manual.
2 – Always wear safety apparel when operating machine such as, Boots, Gloves, Helmet, Eye Protection and never wear loose clothing
3 – Never allow riders or passengers on machine while operating.
4 – Always make sure machine is off and brake is locked before making any adjustments to plow system
5 – Always keep blade in down position when not in use or when working on.

OPERATION

FOR SAFE OPERATION:

1 - The blade and plow mount system were designed with safety in mind to protect you and your machine, certain parts a designed to fail when the system is over stressed.
2 – When adjusting the blade angle make sure blade is off the ground a little and lock blade up and Turn off machine. Always make sure the blade position pin is locked in place and pin is all way Through the swivel.
3 – Always double check the nuts and bolts to make sure everything is secure and tight.
4 – Always know your surroundings and what you are plowing.
5 – Never exceed more than 5 mph or (8 kph) when plowing.
6 - Never have any passengers aboard machine while plowing.
7 - Always wear the proper gear and safety clothing when operating the plow system.
8 - Never hit or ram and large or frozen snow banks.
9 - When plow is not in use lower it to the ground and turn off machine and lock the brake.
10 – The plow system is only intended for snow and not to be used to move any other objects especially any frozen objects.
11 – This plow is not to be used for commercial use at all
12 – Make sure you are familiar with operating the machine and plow before doing so and always Read the operator’s manual.

PLOW MOUNT INSTALLATION INSTRUCTIONS
08-14 RZR 800 / 11-14 Ranger 400-500-570
03-08 Ranger 500-700 / 12-14 RZR 570
13-14 Ranger 800 Mid / 2012 Ranger EV
06-13 Prowler 550-650-700-1000
12-14 Bobcat 3400

ITEM	PART#	QTY.	DESCRIPTION
1	2754-70	1	Plow Mount Weldment
2	HDW9063	4	5/16 x 1-1/2 x 4-1/4 Sq U-Bolt
3	HDW9062	4	5/16 x 2 x 3-1/2 Sq U-Bolt
4	HDW2073	2	5/16 x 1-1/2 x 3-1/2 Sq U-Bolt
5	HDW9002	8	5/16 Flat Washer
6	HDW7058	8	5/16 Nylock Nut
7	HDW9412	1	5/8rd x 1/4Lg Spacer Tube

PART# 4501-0630

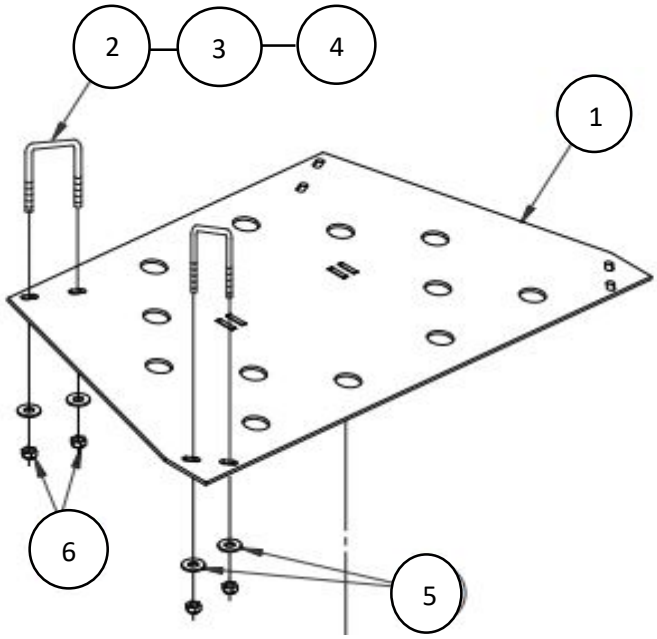

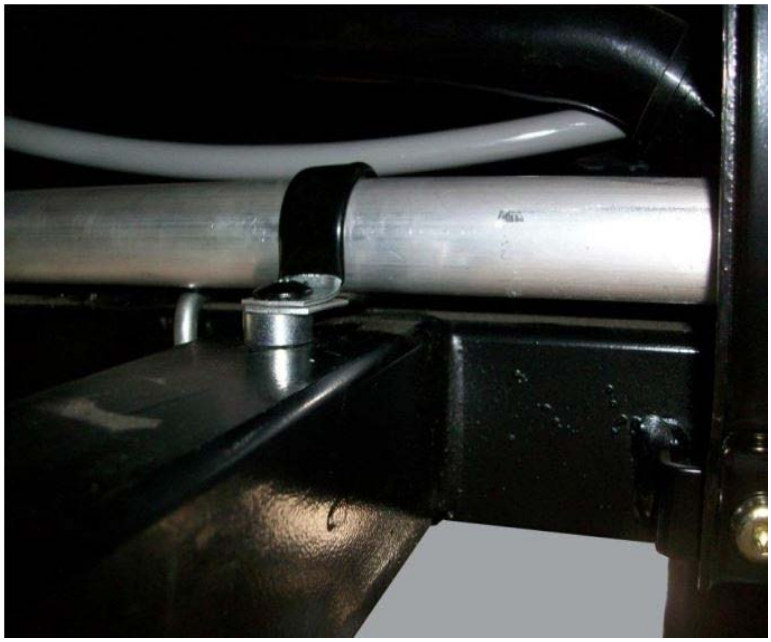

ARCTIC CAT PROWLER

On some of the Prowlers you will need to use the spacer which will go under the rubber clamp that holds a coolant line to the floor board support. This spacer will go under the clamp to raise up the line to make clearance for a mounting u-bolt. It is not required on all models.

BOTTOM MOUNT INSTALLATION INSTRUCTIONS
ARCTIC CAT PROWLER

1. Hang u-bolts over the main frame tubes as illustrated. The narrow side of the mount goes toward the front of the machine. **Note: Skid plates can either be removed for installation, or holes can be drilled into the skid plate where the u-bolts hang.** Use four 2" x 3.5" square u-bolts around the frame tubes.

2. See diagram #2 below for which holes to use for the Prowler. Install the bottom mount onto the u-bolts and install flat washers and nylock nuts. Tighten firmly.

3. Slide the blade/push tube assembly under the ATV. Lift the rear of the assembly up and align the holes in the bottom mount tabs and push tube and install the wire loop pins.

Front of Machine

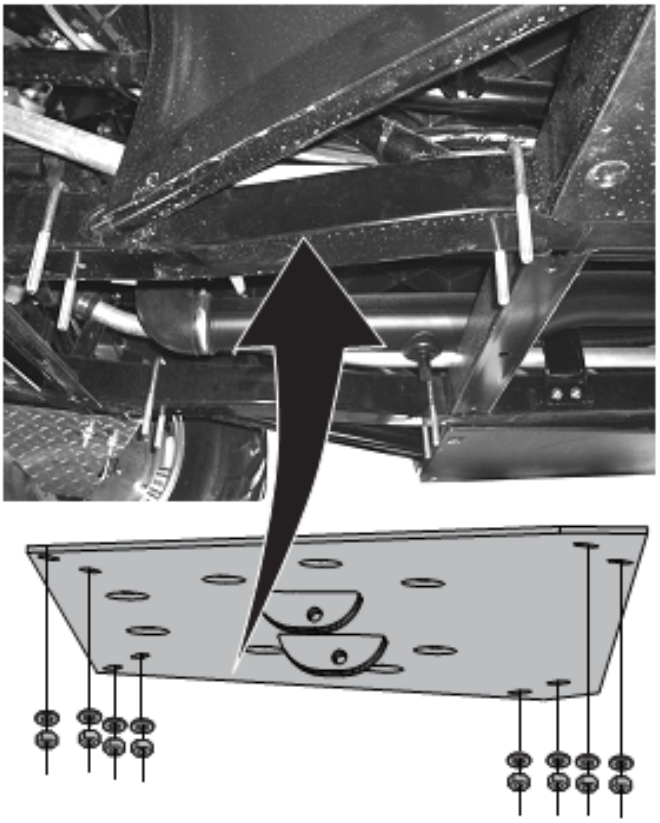

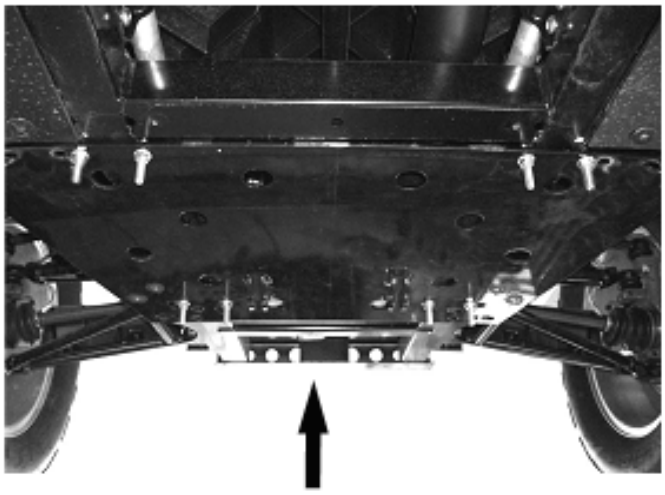

Front of Machine

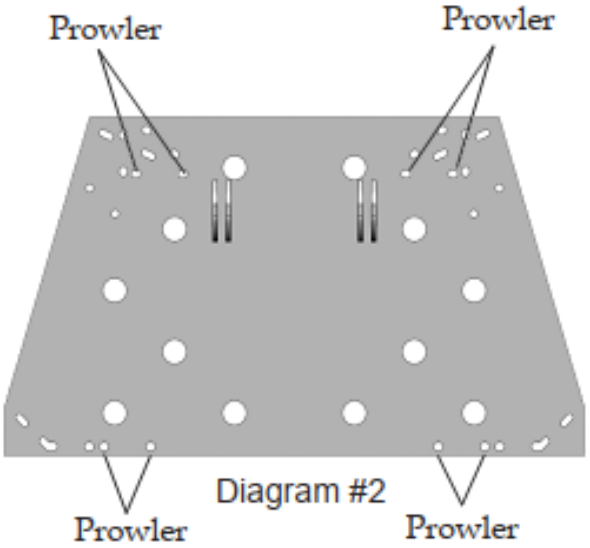

Diagram #2

U-BOLTS:

For Prowler:
- Use (4) HDW9062 2" x 3.5" U-bolts

NOTE: YOU MAY WANT TO CUT OFF ANY EXCESS THREADS FROM THE U-BOLTS AFTER INSTALLATION.

INST2754PF

BOTTOM MOUNT INSTALLATION INSTRUCTIONS
POLARIS RZR 570/800

1. Hang u-bolts over the main frame tubes as illustrated. The narrow side of the mount goes toward the front of the machine. **Note: Skid plates can either be removed for installation, or holes can be drilled into the skid plate where the u-bolts hang.** For the front of the mount use two 2" x 3.5" square u-bolts, and the rear will use two 1.5" x 4 - 1/4" square u-bolts. NOTE: You may have to pushthe plastic floor up using a pry-bar to get the u-bolts in place.
2. See diagram #2 below for which holes to use for the RZR. Install the bottom mount onto the u-bolts and install flat washers and nylock nuts. Tighten firmly.
3. Slide the blade/push tube assembly under the ATV. Lift the rear of the assembly up and align the holes inthe bottom mount tabs and push tube and install the wire loop pins.
4. Some 2014 and newer models have a welded steel bottom pan that will require drilling two holes for the front inner u-bolts. Bolt the back of the mount in place making sure to line up the front holes over the frame rail. Use the front inner hole in the mount as a templete to drill a 3/8" hole througn the steel pan.

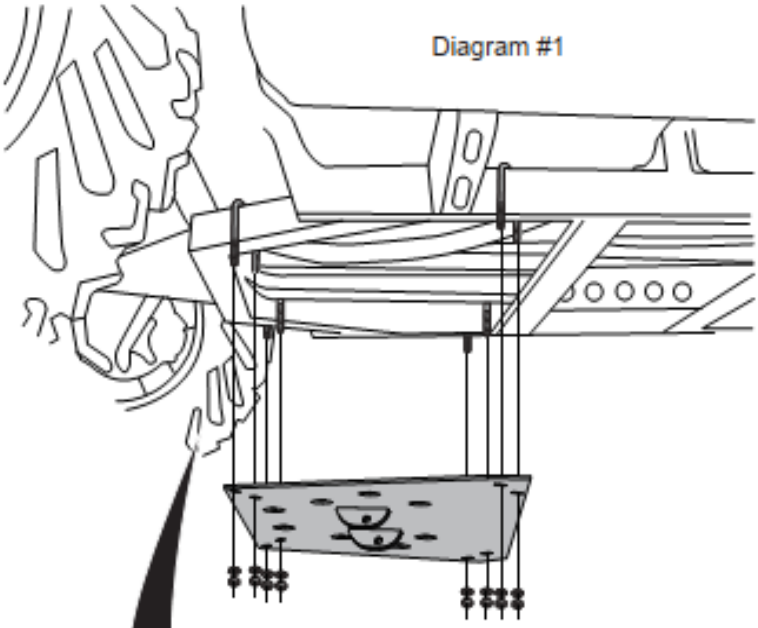

Diagram #1

U-BOLTS:

For RZR:

- Use (2) HDW9062 2" x 3.5" U-bolts in front and (2) HDW9063 1.5" x 4.25" in back.

NOTE: YOU MAY WANT TO CUT OFF ANY EXCESS THREADS FROM THE U-BOLTS AFTER INSTALLATION.

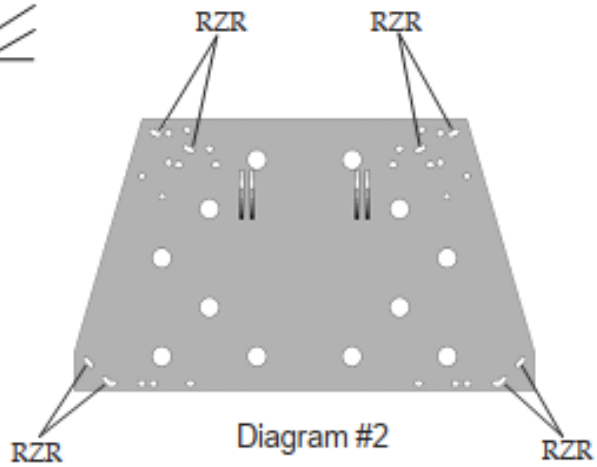

Diagram #2

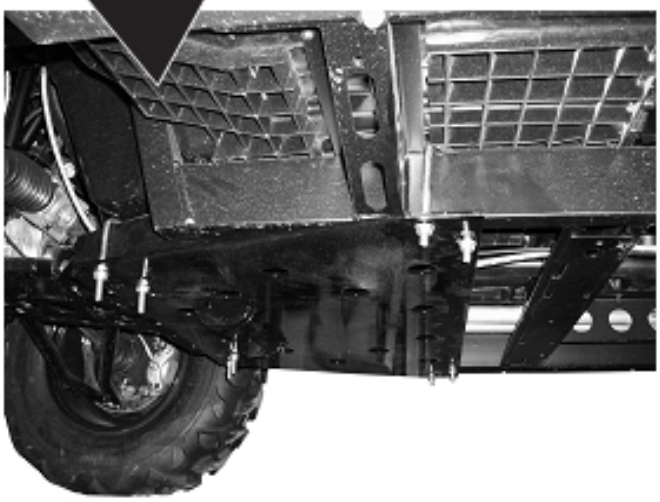

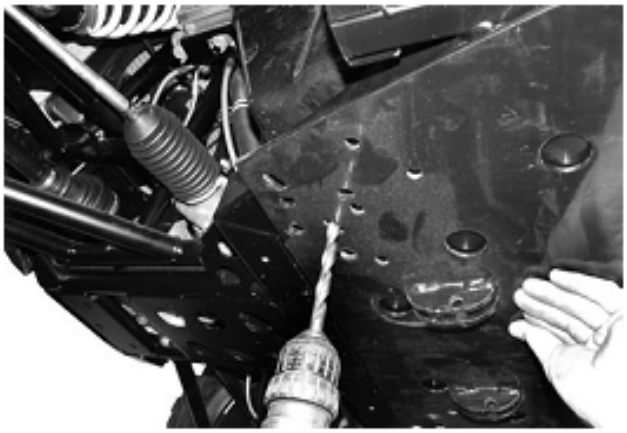

Drill through the steel skidpan for the front inner holes on 2014+ models.

INST2475PF

BOTTOM MOUNT INSTALLATION INSTRUCTIONS
2011-13 POLARIS RANGER 400/500

1. Hang u-bolts over the main frame tubes as illustrated. The narrow side of the mount goes toward the front of the machine. **Note: Skid plates can either be removed for installation, or holes can be drilled into the skid plate where the u-bolts hang.** Use four 1.5" x 4-1/4" square u-bolts . NOTE: You may have to push the plastic floor up using a pry-bar to get the u-bolts in place

2. See diagram #2 below for which holes to use for the Ranger. Install the bottom mount onto the u-bolts and install flat washers and nylock nuts. Tighten firmly.

3. Slide the blade/push tube assembly under the ATV. Lift the rear of the assembly up and align the holes in the bottom mount tabs and push tube and install the wire loop pins.

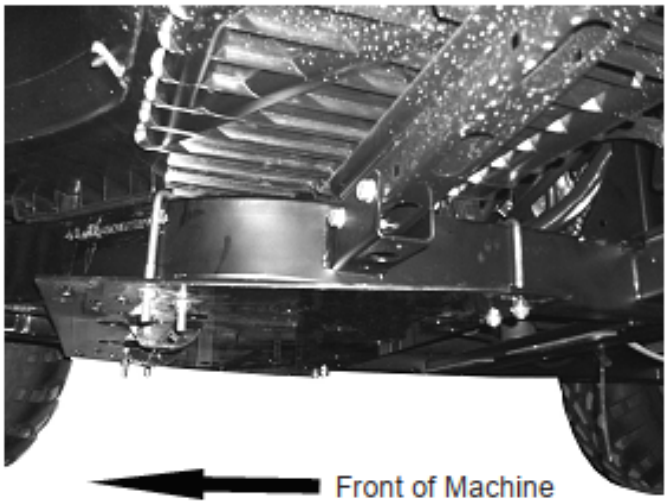

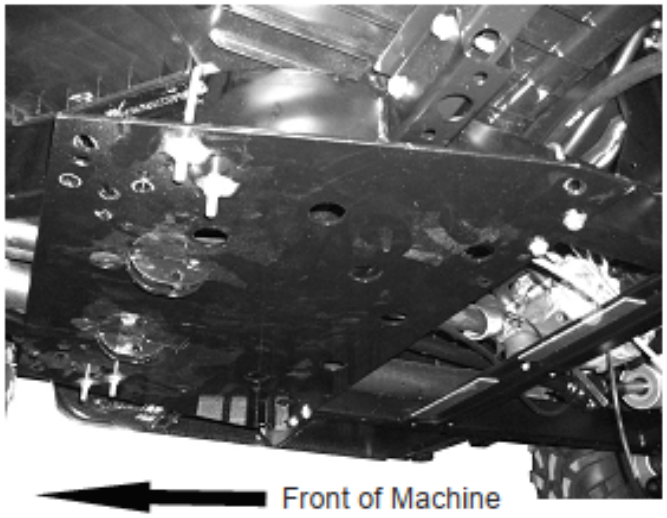

U-BOLTS:

For Ranger 400/500:

Use (4) HDW9063 1.5" x 4.25" u-bolts.

NOTE: YOU MAY WANT TO CUT OFF ANY EXCESS THREADS FROM THE U-BOLTS AFTER INSTALLATION.

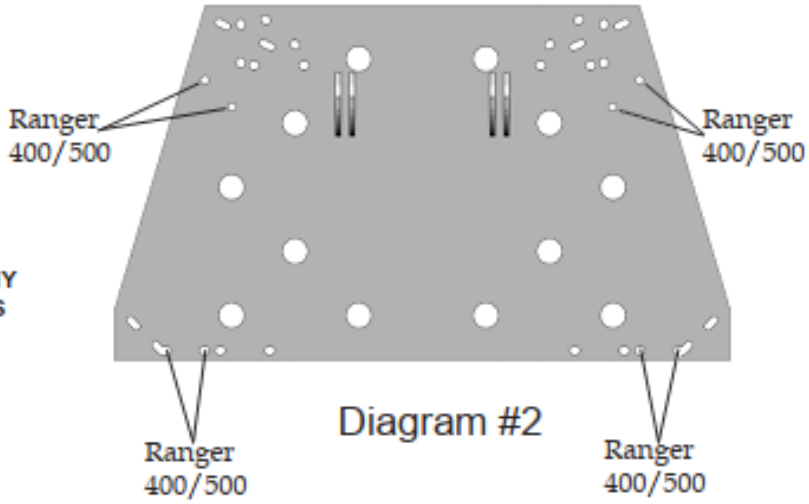

Diagram #2