MOOSE UNIVERSAL ATV PUSH TUBE

BLADE HARDWARE MOUNTING INSTRUCTIONS

PART# 4501-0759

CUSTOMER MUST RECEIVE A COPY OF THIS INSTRUCTION SHEET AT TIME OF PURCHASE

Shaded items are pre-assembled with the Snowplow blade

INST2707PF

ITEM	PART#	QTY.	DESCRIPTION
1		1	Blade 42", 50", 55", 60"
2		1	Wear Bar 42", 50", 55", 60"
3	HDW2064	7	5/16 x 1 Carriage Bolt
4	HDW7056	7	5/16 Serrated Flange Nut
5	HDW2161	2	3/8 x 3/4 Shoulder Bolt
6	HDW7058	2	5/16 Nylock Nut
7	2550	2	Blade Skid
8	HDW9005	12	5/8 Flat Washer
9	HDW2356	2	3/4 Rubber Spacer
10	HDW2315	2	3/16 x 1-1/4 Lynch Pin
11	HDW7061	5	3/8 Nylock Nut
12	HDW2117	2	3/8 x 6 Eye Bolt
13	HDW2369	2	Blade Spring
14	KD60	1	Blade Swivel
15	HDW93303	2	3/8 x 3/4 Socket Head Bolt
16	HDW2160	1	1/2 x 1 Shoulder Bolt
17	HDW9025	2	1/2 Flat Washer
18	HDW2323	2	3/8 x 1-1/2 Wire Loop Pin
19	KD64	1	Blade Position Pin Assembly
20	2707-100	1	Push Tube Weldment

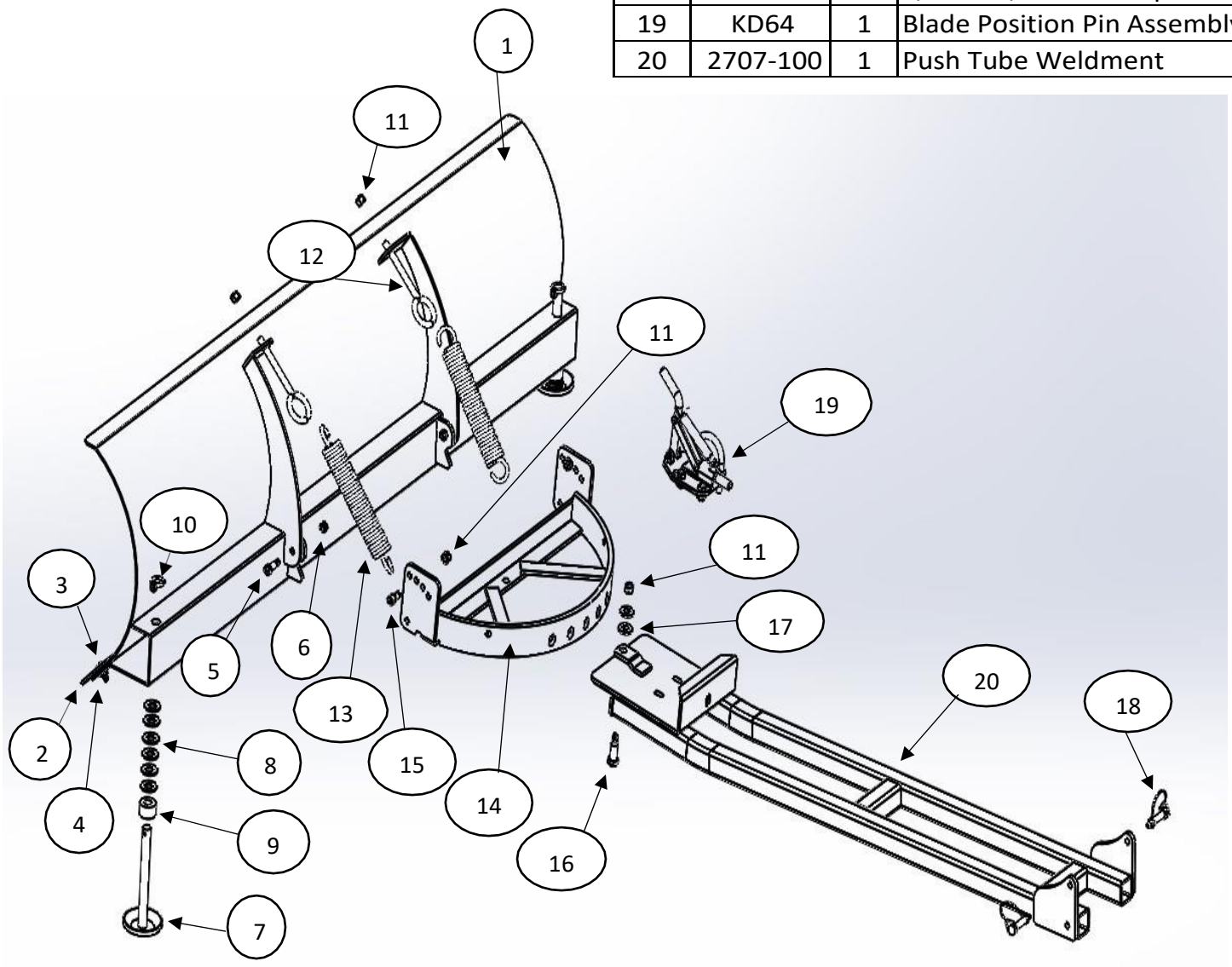

Install the blade swivel to the front of the push tubes using the ½"x 1" shoulder bolt, two ½" washers and one 3/8" nylock nut. Make sure swivel still turns after tightening (you may only need one washer).

Install the KD64 blade position pin assembly to push tube by removing the nuts from the bottom and placing on top of push tube with pin going through the swivel and push tube bracket. Align holes and secure with nuts previously removed. The U-bolt on the position pin assembly is where you hook your cable winch to.

Hook the blade to the swivel by removing the shoulder bolts on the back of the blade and sliding swivel in place between the blade arc and tab on back of blade. Bolt using the bottom holes and tighten. Use the 3/8" x ¾" socket head bolt and 3/8" nylock nuts for the blade stop in the top set of holes (start in the second hole back hole).

Hook your blade springs to the swivel in the small hole on the top edge of the half-moon part. Use the 3/8" x 6" eye bolt to go from spring to arc on the back of blade. Secure with 3/8" nylock nuts and tighten so there is about 1"to 1 ½" of thread shown (this is a starting point for spring tension).

The push tube will attach under the machine to the plow mount with the 3/8" x 1 ½" wire loop pins. After all is attached, you may adjust the blade to get the skids to be level or tilted back slightly. You may adjust the skids by transferring washers from top to bottom or vice versa. Skids and wear bar should touch ground at same time (or to your discretion).

ITEM	PART#	QTY.	DESCRIPTION
A	KD64-3	1	Position Pin Handle
B	KD64-2	2	Position Pin Handle Straps
C	HDW2250	3	#8 x 1-1/2 Phillips Screw
	HDW7088	3	#8 Nylock Nuts (not visible)
D	HDW2145	1	3/8 x 2 x 3 Rd. U-Bolt
E	KD64-4	1	1/2 x 3-1/4 Position Pin
F	HDW2367	1	Position Pin Spring
G	KD64-1	1	Position Pin Bracket
H	HDW2106	2	3/8 x 3/4 Hex Bolts
I	HDW7060	6	3/8 Serrated Flange Nut

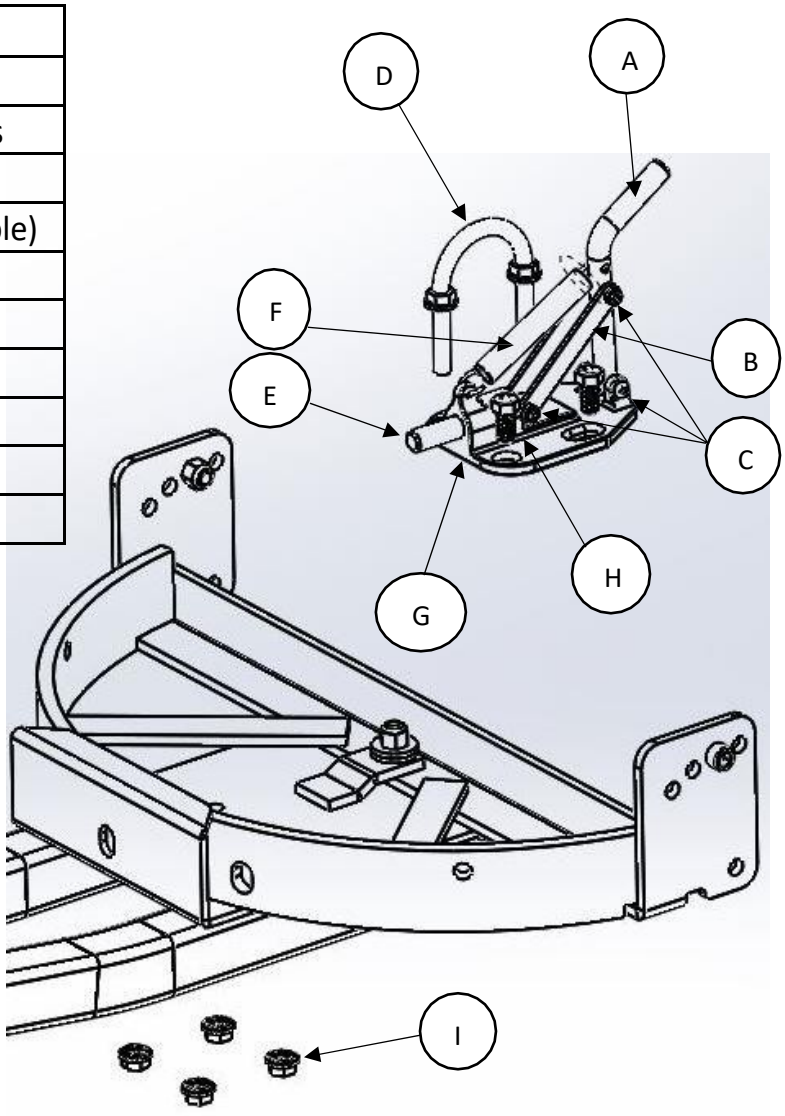

MOOSE UTILITY DIVISION

FOR QUESTIONS OR COMMENTS PLEASE CALL: 320-964-1616 (7:00 to 4:30 CST, Monday through Thursday).

**OPERATING INSTRUCTIONS*

READ BEFORE OPERATING

Customer must receive a copy of these instructions at time of purchase.

DANGER

Remove bottom mount and/or front mount before doing any trail riding.

To avoid serious injury and/or death:

1. Always use extreme caution while operating the plow on slopes, grades or slippery surfaces.
2. Stay clear of blade and other moving parts during operating the plow.
3. When plowing, never ram the pile of snow or frozen objects.
4. Always back up before raising the plow blade.
5. Beware of your area and avoid hitting frozen objects at all costs.

WARNING

To avoid personal or other injury:

1. Read your machine's operators manual.
2. Always wear safety apparel when operating machine such as: boots, gloves, helmet and eye protection. Never wear loose clothing.
3. Never allow passengers on machine while operating.
4. Always keep blade in the down position when not in use or when performing maintenance.

OPERATION

For Safe Operation:

1. The blade and plow mount system were designed with safety in mind to protect you and your machine. Certain parts are designed to fail when the system is over-stressed.
2. When adjusting the blade angle: make sure blade is off the ground slightly, lock blade and turn off machine. Always make sure the blade position pin is locked and the pin is all the way through the swivel.
3. Always double check the nuts and bolts to make sure everything is secure/tight.
4. Always know your surroundings and what you are plowing.
5. Never exceed more than 5 mph or (8 kph) when plowing.
6. Never hit or ram and large or frozen snowbanks.
7. When plow is not in use: lower it to the ground, turn off machine and lock the brake.
8. The plow system is only intended for snow and not to be used to move any other objects (especially any frozen objects).
9. This plow is not to be used for commercial purposes.
10. Make sure you are familiar with operating the machine/plow before doing so. Always read the operator's manual.

FOR QUESTIONS OR COMMENTS PLEASE CALL: 320-964-1616 (7:00 to 4:30 CST, Monday through Thursday).

ITEM	PART#	QTY.	DESCRIPTION
1	2759-100	1	Plow Mount Weldment
2	HDW2073	4	5/16 x 1-1/2 x 3-1/2 Sq. U-Bolt
3	HDW9002	8	5/16 Flat Washer
4	HDW7058	8	5/16 Nylock Nut

12-13 JOHN DEERE RSX 850i / XUV 550

PART# 4501-0633

Remove the long narrow skid plate beneath the Front differential. You will not need to remove the large main Skid Plate. Place the front U-bolt over the frame tubes between the front a-arms as shown. (About 1" in front of the rear arm mount) The back two U-bolt should be placed about 1" in front of the horizontal frame member as shown.

Place the plow mount up onto the U-bolts and use the Washers and nylock nuts to secure. Align and tighten.

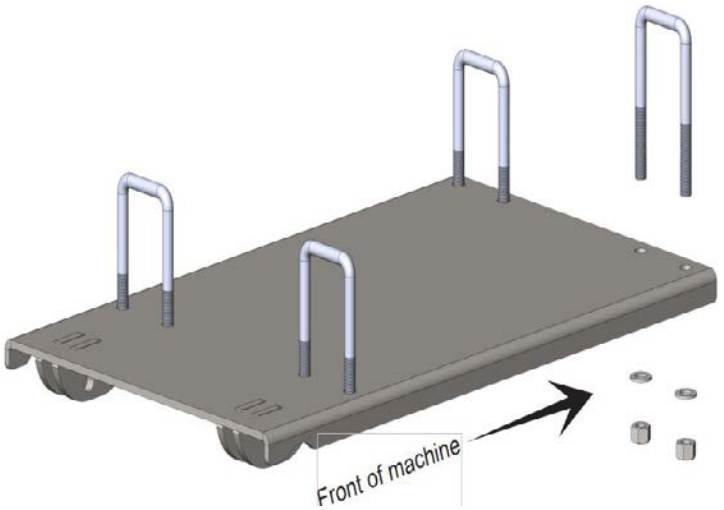

Push tube will pin up to plow mount tabs with wire loop pins that came with the push tube kit.

